SYMBOLS LIST

SYMBOLS LIST

SYMBOL	DESCRIPTION
	ELBOW DOWN
	ELBOW UP
	TEE DN
	TEE UP
	FIXTURE TRAP
	CHECK VALVE
	BALANCING VALVE
	BALL VALVE / ISOLATION VALVE
	OS&Y VALVE
	MIXING VALVE
	WALL SLEEVE
	UNION
	FLOOR CLEAN OUT
	PIPE CAP
	WALL/PIPE CLEAN OUT
	STRAINER
	THERMOMETER
	HOSE BIB, EXTERIOR
	HOSE BIB
	DOUBLE DETECTOR CHECK VALVE
IW	WATER METER ASSEMBLY
	PUMP
	DUAL CHECK VALVE
	FLOW ARROW
	NEW CONNECTION

PIPING SYSTEMS

UNDERGROUND PIPE SYMBOL	DESCRIPTION
	SANITARY, SOIL OR WASTE PIPE
	STORM SEWER PIPE
	SANITARY VENT PIPE
	DOMESTIC COLD WATER PIPE
	DOMESTIC HOT WATER PIPE

ABOVEGROUND PIPE SYMBOL	DESCRIPTION
	DOMESTIC COLD WATER PIPE
	DOMESTIC HOT WATER PIPE
	DOMESTIC HOT WATER RECIRC. PIPE
	SANITARY, SOIL OR WASTE PIPE
	STORM SEWER PIPE
	SANITARY VENT PIPE

ABBREVIATIONS

ABBRV	DESCRIPTION	ABBRV	DESCRIPTION
ACT	ACETYLENE	IW	INDIRECT WASTE
AD	ACCESS DOOR	LAV	LAVATORY
AFF	ABOVE FINISHED FLOOR	MFR	MANUFACTURER
ARCH	ARCHITECTURAL	MB	MOP BASIN
AV	ACID VENT	NIC	NOT IN CONTRACT
AW	ACID WASTE	NP	NON-POTABLE WATER
BV	BALL VALVE	NTS	NOT TO SCALE
CA	COMPRESSED AIR	O	OXYGEN
CI	CAST IRON	OFST	OVERFLOW STORM
CL	CENTER LINE	RM	ROOM
CLG	CEILING	S	SANITARY
CO	CLEANOUT	SE	SEWAGE EJECTOR
CV	CHECK VALVE	SK	SINK
CW	COLD WATER	SP	SUMP PUMP
DFU	DRAIN FIXTURE UNITS	ST	STORM
DIA, Ø	DIAMETER	SQ. FT.	SQUARE FEET
DN	DOWN	TMV	THERMOSTATIC MIXING VALVE
DWG	DRAWING	TYP	TYPICAL
EXST	EXISTING	V	VENT
EA	EACH	VB	VACUUM BREAKER
EWC	ELECTRIC WATER COOLER	VTR	VENT THROUGH ROOF
°F	DEGREES FAHRENHEIT	WC	WATER CLOSET
FLR	FLOOR	NPW	NON POTABLE WATER
FCO	FLOOR CLEANOUT	OFST	OVERFLOW STORM
HD	HUB DRAIN		
HW	HOT WATER		
HWR	HOT WATER RECIRCULATING		

GENERAL PLUMBING NOTES:

1. ALL PLUMBING SHALL BE INSTALLED IN ACCORDANCE WITH THE LATEST EDITION OF THE INDIANA ADMINISTRATIVE CODE & INDIANA BUILDING CODE, AND ALL RELATIVE AMENDMENTS.
2. THIS CONTRACTOR SHALL BE RESPONSIBLE FOR ALL REQUIRED PERMITS AND FEES.
3. DRAWINGS ARE GENERALLY DIAGRAMMATIC. ROUTING OF PIPING, DUCTWORK, CONDUITS, RACEWAYS, ETC. AS SHOWN ON THE DRAWINGS DOES NOT INTEND TO SHOW EVERY RISE, DROP, OFFSET, FITTING NOR EVERY STRUCTURAL ELEMENT THAT MAY BE ENCOUNTERED DURING THE INSTALLATION OF THIS WORK. PLUMBING CONTRACTOR SHALL MAKE ANY REQUIRED CHANGES FROM THE GENERAL ROUTING SHOWN ON THESE DRAWINGS, SUCH AS OFFSETS, BENDS, OR CHANGES IN ELEVATION DUE TO COORDINATION WITH THE WORK OF OTHER TRADES AND BUILDING CONSTRUCTION. ALL CHANGES SHALL BE MADE WITHOUT ADDITIONAL COST TO THE OWNER OR DELAY IN THE COMPLETION DATE OF THE PROJECT.
4. COORDINATE & VERIFY WITH GENERAL CONTRACTOR AND RELATED DISCIPLINES, PRIOR TO START OF ANY WORK, ALL WORK TO BE PERFORMED OUTSIDE OF THE 5'-0" BUILDING PERIMETER LIMITS OF CONSTRUCTION
5. ALL PIPING PASSING THRU FLOORS, WALLS, CEILINGS OR ROOF SHALL HAVE A DUCTILE IRON PIPE SLEEVE INSTALLED AROUND THE PIPE AND/OR INSULATION. SLEEVES THROUGH FOUNDATION WALLS SHALL BE AT LEAST 2 PIPE SIZES LARGER THAN THE SERVICE PIPE. PROVIDE AN ESCUTCHEON PLATE AROUND PENETRATIONS EXPOSED TO VIEW. ESCUTCHEON PLATES SHALL BE LARGE ENOUGH TO COVER THE ENTIRE HOLE. ALL PENETRATIONS SHALL BE SEALED TO MAINTAIN THE WALL/FLOOR/ROOF FIRE & INSULATION RATINGS.
6. ALL FLOOR MOUNTED EQUIPMENT NOT PROVIDED ON A SKID IS TO BE INSTALLED ON 4" THICK CONCRETE HOUSEKEEPING PAD.
7. REFER TO ARCHITECTURAL AND STRUCTURAL DRAWINGS FOR FINISHED CEILING HEIGHTS, AND LOCATION OF WALL, ROOF, AND FLOOR OPENINGS.
8. PROVIDE HANGERS AND SUPPLEMENTAL SUPPORT STEEL FOR ALL EQUIPMENT AND PIPING. ALL WATER SUPPLY PIPING SHALL BE SUSPENDED WITH CLEVIS AND/OR TRAPEZE PIPE HANGERS. PIPE COVERING PROTECTION SADDLES OR SHEET METAL INSULATION SHIELDS.
9. THE HOT WATER SUPPLY FOR EACH LAVATORY AND SINK IS TO BE INSULATED. THE P-TRAP AND WASTE DRAIN PIPE FOR EACH ADA ACCESSIBLE LAVATORY AND SINK IS TO BE INSULATED.
10. CONTRACTOR SHALL VISIT THE SITE AND VERIFY EXISTING CONDITIONS PRIOR TO SUBMITTING BID OR DOING ANY WORK. CONTRACTOR SHALL NOTIFY ARCHITECT/ENGINEER OF ANY DISCREPANCIES BETWEEN PLANS AND ACTUAL CONDITIONS.
11. PROVIDE ACCESS TO ALL VALVES AND SYSTEM COMPONENTS REQUIRING ACCESS. ALL PIPING ACCESSORIES AND EQUIPMENT IN MECHANICAL ROOMS SUCH AS ISOLATION VALVES, RECIRCULATION PUMPS, ETC. SHALL BE INSTALLED AT A REASONABLE HEIGHT IN ORDER TO FACILITATE MAINTENANCE.
12. PLUMBING CONTRACTOR TO GIVE ALL LOCATIONS AND DIMENSIONS OF ALL REQUIRED ACCESS PANELS TO THE GENERAL CONTRACTOR. GENERAL CONTRACTOR WILL SUBMIT TO THE ARCHITECT/ENGINEER FOR APPROVAL ALL FINISH REQUIREMENTS PRIOR TO INSTALLATION.
13. SEAL ALL WALL PENETRATIONS FOR ACOUSTICALLY SENSITIVE SPACES AS INDICATED IN THE ARCHITECTURAL FINISH SCHEDULE, ON ARCHITECTURAL SHEET A004 & AC' SHEETS.
14. GENERAL CONTRACTOR'S MEP/P COORDINATOR TO SUBMIT MEP/P COORDINATION DRAWINGS FOR "REVIEW OF DESIGN INTENT" INDICATING COORDINATION OF ALL TRADES PRIOR TO PLACEMENT OF MEP/FP WORK. DRAWINGS TO BE SUBMITTED AFTER SPRINKLER DRAWINGS HAVE BEEN SUBMITTED AND APPROVED BY BFP AND SUBSEQUENTLY COORDINATED WITH ALL OTHER TRADES. 2
15. THE FLOOR DRAINS IN THE ENTRY VESTIBULES SHALL BE PROVIDED WITH VEGETABLE OIL PERIODIACLLY WHEN THE CONDITIONS ARE DRY TO PREVENT THE ESCAPE OF SEWER GAS FROM THE FLOOR DRAINS. THE UNIVERSITY SHOULD HAVE A MAINTIANANCE SCHEDULE TO PERFORM THIS FUNCTION THROUGHOUT THE YEAR.

DOMESTIC WATER:

1. ALL WATER SUPPLIED TO EQUIPMENT BY OTHER TRADES SHALL HAVE AN ISOLATION VALVE AND AN APPROVED BACKFLOW PREVENTER WHICH SHALL BE SUPPLIED AND INSTALLED BY THIS CONTRACTOR.
2. ALL DOMESTIC WATER SUPPLIES TO FIXTURES AND EQUIPMENT SHALL HAVE AIR CHAMBERS AS REQUIRED BY CODE.
3. ALL WATER SUPPLY AND RETURN PIPING SHALL BE INSULATED, INCLUDING ALL PIPING ABOVE CEILINGS, IN PIPE CHASES, AND IN WALLS. SEE SPECIFICATIONS FOR TYPE AND THICKNESS OF INSULATION. PROVIDE VALVE HANDLE EXTENSIONS ON ALL INSULATED PIPING.
4. ALL HOT WATER SUPPLY PIPING SHALL BE INSTALLED TO COMPENSATE FOR EXPANSION OF THE PIPE BY INSTALLING PIPE ANCHORS, GUIDES, EXPANSION JOINTS, PIPE OFFSETS, OR LOOPS. EXPANSION JOINTS TO ACCOMMODATE MOVEMENT IN (3) AXIS(S).
5. ALL INTERIOR AND EXTERIOR HOSE BIBBS/WALL HYDRANTS SHALL RECEIVE THE WATER SUPPLY DOWNSTREAM OF A STRAINER AND BACKFLOW PREVENTER INSTALLED INSIDE THE BUILDING.
6. EACH GROUP OF FIXTURES SUPPLIED WITH A BRANCH FROM THE MAIN SHALL HAVE AN ISOLATION VALVE NEAR THE POINT OF CONNECTION TO THE MAIN. ALL EQUIPMENT SUPPLIED BY COLD AND/OR HOT WATER SHALL HAVE AN ISOLATION VALVE ON THE WATER SUPPLY.
7. PITCH ALL SUPPLY AND RETURN LINES TO DRAIN COMPLETELY THROUGH LOWER EQUIPMENT FIXTURES, UNIONS, AND DRAIN VALVES. INSTALL A 1/2" DRAIN VALVE WITH 3/4" HOSE THREAD AND VACUUM BREAKER OUTLET IN ALL MAIN PIPING RUNS WHICH WOULD NOT BE ABLE TO DRAIN THRU A LOWER PIECE OF EQUIPMENT.
8. ALL WATER DISTRIBUTION SYSTEMS, POTABLE AND NONPOTABLE, SHALL BE IDENTIFIED BY COLOR MARKING OR METAL TAGS AS REQUIRED BY ASME A13.1.
9. COPPER PIPE ABOVE GROUND SHALL BE (TYPE L) MINIMUM, SWEAT WITH WROUGHT FITTINGS
10. PROVIDE UNIONS AND/OR FLANGES TO DISCONNECT ALL PERTINENT EQUIPMENT INCLUDING BUT NOT LIMITED TO PUMPS, WATER HEATERS, TANKS, FILTERS AND VALVE TRAINS.
11. ALL PLUMBING PIPING SUBJECT TO FREEZING IN OUTSIDE WALLS SHALL BE PROVIDED WITH ELECTRIC HEAT TRACE AND INSULATION.

SANITARY STORM & VENT:

1. ALL SANITARY AND STORM PIPING SHALL SLOPE AT 1/4" PER FOOT FOR 2-1/2" AND SMALLER, AT 1/8" PER FOOT FOR 3" TO 6", AND 1/16" FOR 8" AND LARGER PIPING UNLESS INDICATED OTHERWISE ON THE DRAWINGS.
2. ALL HORIZONTAL DRAINS SHALL BE PROVIDED WITH CLEANOUTS LOCATED NO MORE THAN 100 FEET APART, EXCEPT THAT THE MAXIMUM SHALL BE 50 FEET FOR DRAINS 4"Ø OR LESS, 150 FEET FOR DRAINS 10"Ø OR LARGER.
3. ALL SOIL STACKS SHALL RUN FULL SIZE THROUGH THE ROOF.
4. THE DIAMETER OF ALL VENTS SHALL BE AT LEAST ONE-HALF THE DIAMETER OF THE DRAIN LINE SERVED BUT NOT LESS THAN 1-1/2".
5. CATCH BASINS AND MANHOLES ARE THE RESPONSIBILITY OF THE SITE CONTRACTOR.
6. IN AREAS SUCH AS MECHANICAL/ELECTRICAL ROOMS, WHERE A TRAP SEAL IS SUBJECT TO LOSS BY EVAPORATION, PROVIDE A DEEP SEAL TRAP (CONSISTING OF A 4-INCH SEAL), A TRAP FILLED WITH MINERAL OIL, OR A TRAP PRIMER PER MANUFACTURERS REQUIREMENTS

INSULATION:

1. DOMESTIC HOT & COLD WATER-SUSPENDED PIPING: HEAVY DENSITY, FIBERGLASS PIPE INSULATION. 1" THICK, WITH FLAME RETARDANT VAPOR BARRIER JACKET, AS MANUFACTURED BY OWENS-CORNING OR JOHNS-MANVILLE. ALL PIPING SHALL BE INSULATED AS WELL AS ALL WATER PIPING IN EXTERIOR WALLS WHERE FREEZING MAY OCCUR.
2. STORM DRAIN-SUSPENDED PIPING: HEAVY DENSITY, FIBERGLASS PIPE INSULATION 1/2" THICK, WITH FLAME RETARDANT VAPOR BARRIER JACKET, AS MANUFACTURED BY OWENS-CORNING OR JOHNS-MANVILLE. INSULATE ALL INTERIOR HORIZONTAL STORM PIPING TO PREVENT CONDENSATION. INSULATE ALL HORIZONTAL RUNS OF STORM PIPING ADJACENT TO ROOF DRAINS.
3. VENTS-EXPOSED PIPING: HEAVY DENSITY, FIBERGLASS PIPE INSULATION. 1/2" THICK, WITH FLAME RETARDANT VAPOR BARRIER JACKET, AS MANUFACTURED BY OWENS-CORNING OR JOHNS-MANVILLE WITH PVC JACKET. INSULATE INTERIOR, EXPOSED, HORIZONTAL VENT PIPING & VERTICAL LEADERS FROM VTR TO PREVENT CONDENSATION.

MATERIALS:

1. UNDERGROUND STORM, DRAINAGE, AND VENT PIPE SHALL BE: CAST-IRON PIPE, HUBLESS: ASTM A-888; CISPI 301
2. ABOVE-GROUND STORM, DRAINAGE AND VENT PIPE SHALL BE: CAST-IRON PIPE, HUBLESS: CISPI 301; ASTM A888 WITH STANDARD, SHIELDED, STAINLESS STEEL COUPLINGS; CISPI 310 WITH CORRUGATED SHIELD, STAINLESS-STEEL BANDS AND TIGHTENING DEVICES; ASTM C 564 RUBBER SLEEVE, COPPER OR COPPER-ALLOY PIPE: ASTM B-42; ASTM B-302 COPPER OR COPPER-ALLOY TUBING (TYPE K OR L): ASTM 75; ASTM B-88; ASTM B-251; ASTM B-306
3. UNDERGROUND WATER SERVICE PIPE SHALL BE: COPPER OR COPPER-ALLOY TUBING (TYPE K); ASTM B-74; ASTM B-88; ASTM B-251; ASTM B-447 DUCTILE IRON WATER PIPE (CEMENT LINED); AWWA C-151; AWWA C-115
4. ABOVE-GROUND WATER DISTRIBUTION PIPE SHALL BE: ALL SIZES - COPPER OR COPPER-ALLOY TUBING (TYPE K OR L); ASTM B-74; ASTM B-88; ASTM B-251; ASTM B-447ℓ AND LARGER - GALVANIZED STEEL PIPE: ASTM A-53

boora

Boora Architects Inc.
720 SW Washington Suite 800
Portland, OR 97205
T. 503.226.1575 F. 503.241.7429
www.boora.com

dbHMS
design build engineering
303 W. Erie Street, Suite 510 Chicago, IL 60654
office: 312.915.0557
fax: 312.915.0558
website: www.dbhms.com

BENJAMIN RUBACH REGISTERED No. PE11100371 STATE OF INDIANA PROFESSIONAL ENGINEER

Earlham College Science Complex
Phase 2
801 National Road West
Richmond, IN 47374-4095

MARK	DATE	DESCRIPTION
2	1.28.2014	Addendum 3
1	1.15.2014	Addendum 2

Issued: February 28, 2014
Scale: NTS

Copyright

CONFORMED SET

PLUMBING GENERAL NOTES & SYMBOLS

P001

2/26/2014 5:06:52 PM

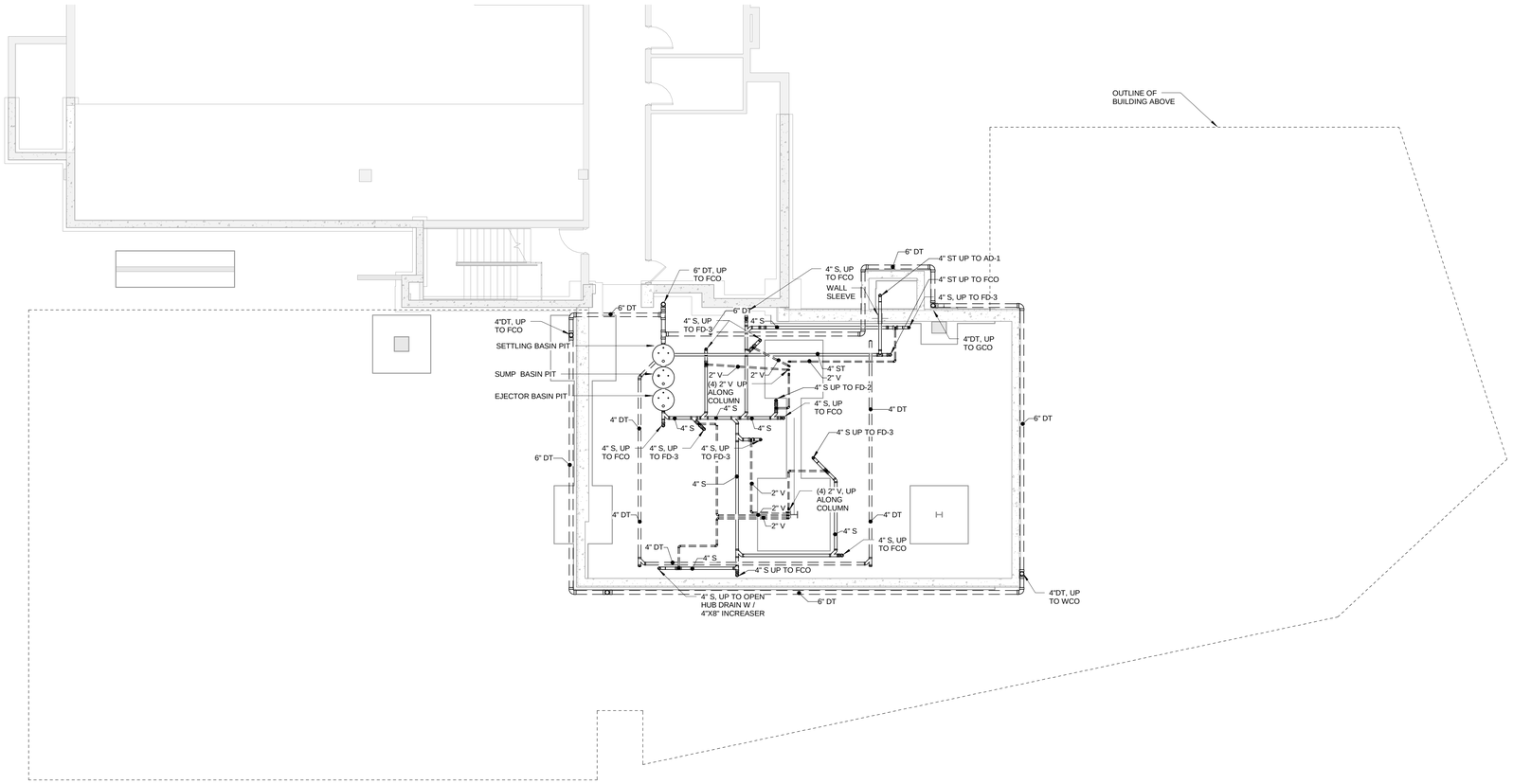

1 BASEMENT - UNDERFLOOR PLUMBING PLAN
1/8" = 1'-0"

N

2/26/2014 5:06:59 PM

boora

Boora Architects Inc.
720 SW Washington Suite 800
Portland, OR 97205
T. 503.226.1575 F. 503.241.7429
www.boora.com

dbHMS
design build engineering
303 W. Erie Street, Suite 510 Chicago, IL 60654
office: 312.915.0557
fax: 312.915.0558
website: www.dbhms.com

BENJAMIN RUBACH REGISTERED No. PE11100371 STATE OF INDIANA PROFESSIONAL ENGINEER

Earlham College Science Complex Phase 2

801 National Road West
Richmond, IN 47374-4095

MARK	DATE	DESCRIPTION
1	1.15.2014	Addendum 2

Issued: February 28, 2014
Scale: 1/8" = 1'-0"

Copyright

CONFORMED SET

UNDERFLOOR PLAN - PLUMBING

P10U

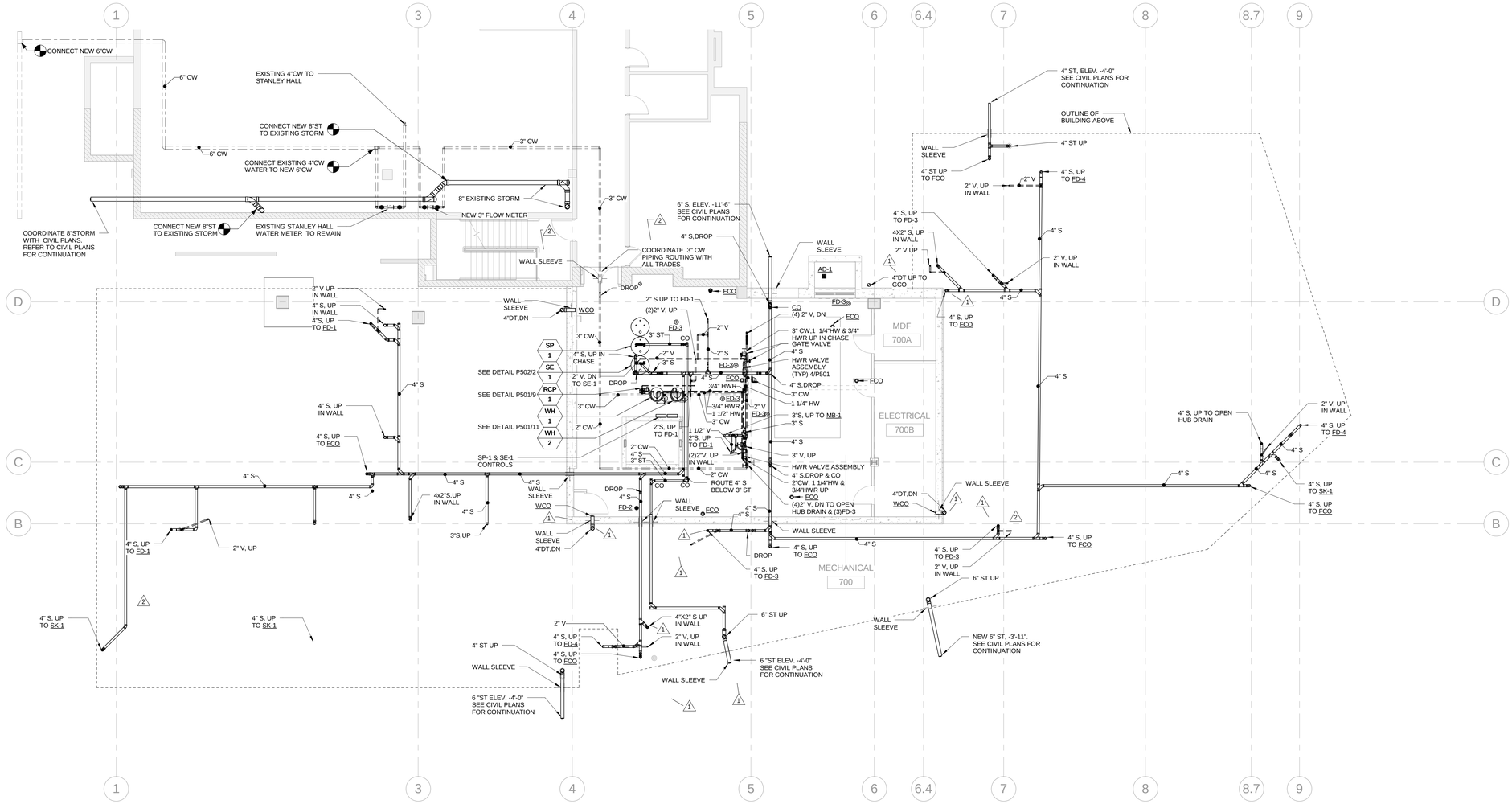
CONNECT NEW 6"CW
6" CW
EXISTING 4"CW TO STANLEY HALL
CONNECT NEW 8"ST TO EXISTING STORM
6" CW
CONNECT EXISTING 4"CW WATER TO NEW 6"CW
3" CW
8" EXISTING STORM
NEW 3" FLOW METER
COORDINATE 8"STORM WITH CIVIL PLANS. REFER TO CIVIL PLANS FOR CONTINUATION
CONNECT NEW 8"ST TO EXISTING STORM
EXISTING STANLEY HALL WATER METER TO REMAIN
WALL SLEEVE
COORDINATE 3" CW PIPING ROUTING WITH ALL TRADES
6" S, ELEV. -11'-6" SEE CIVIL PLANS FOR CONTINUATION
4" S,DROP
WALL SLEEVE
AD-1
4" ST, ELEV. -4'-6" SEE CIVIL PLANS FOR CONTINUATION
OUTLINE OF BUILDING ABOVE
WALL SLEEVE
4" ST UP
4" ST UP TO FCO
2" V, UP IN WALL
4" S, UP TO FD-4
4" S, UP TO FD-3
4X2" S, UP IN WALL
2" V UP
4"DT UP TO GCO
2" V, UP IN WALL
4" S
2" V UP IN WALL
4" S, UP IN WALL
4"S, UP TO FD-1
WALL SLEEVE
WCO
4"DT,DN
2" S UP TO FD-1
(2)2" V, UP
FCO
CO
(4) 2" V, DN
FCO
3" CW,1 1/4"HW & 3/4" HWR UP IN CHASE
GATE VALVE
4" S
HWR VALVE ASSEMBLY (TYP) 4/P501
4" S,DROP
3" CW
1 1/4" HW
3"S, UP TO MB-1
3" S
4" S
3" V, UP
HWR VALVE ASSEMBLY
4" S,DROP & CO
2"CW, 1 1/4"HW & 3/4"HWR UP
FCO
(4)2" V, DN TO OPEN HUB DRAIN & (3)FD-3
WALL SLEEVE
4" S, UP TO FCO
4" S, UP TO FCO
MDF
700A
ELECTRICAL
700B
MECHANICAL
700
4" S, UP TO FCO
4" S, UP TO FD-3
2" V, UP IN WALL
6" ST UP
WALL SLEEVE
NEW 6" ST, -3'-11" SEE CIVIL PLANS FOR CONTINUATION
4" S, UP TO OPEN HUB DRAIN
2" V, UP IN WALL
4" S, UP TO FD-4
4" S, UP TO SK-1
4" S, UP TO FCO
SP 1
SE 1
RCP 1
WH 1
WH 2
SEE DETAIL P502/2
SEE DETAIL P501/9
SEE DETAIL P501/11
SP-1 & SE-1 CONTROLS
4" S, UP IN CHASE
2" V, DN TO SE-1
DROP
3" CW
2" CW
2" S
4" S
3/4" HWR
1 1/2" HW
3" CW
2"S, UP TO FD-1
1 1/2" V
2"S, UP TO FD-1
(2)2"V, UP IN WALL
2" CW
4" S
3" ST
ROUTE 4" S BELOW 3" ST
4" S, UP IN WALL
4" S, UP TO FCO
4" S
4" S
4" S

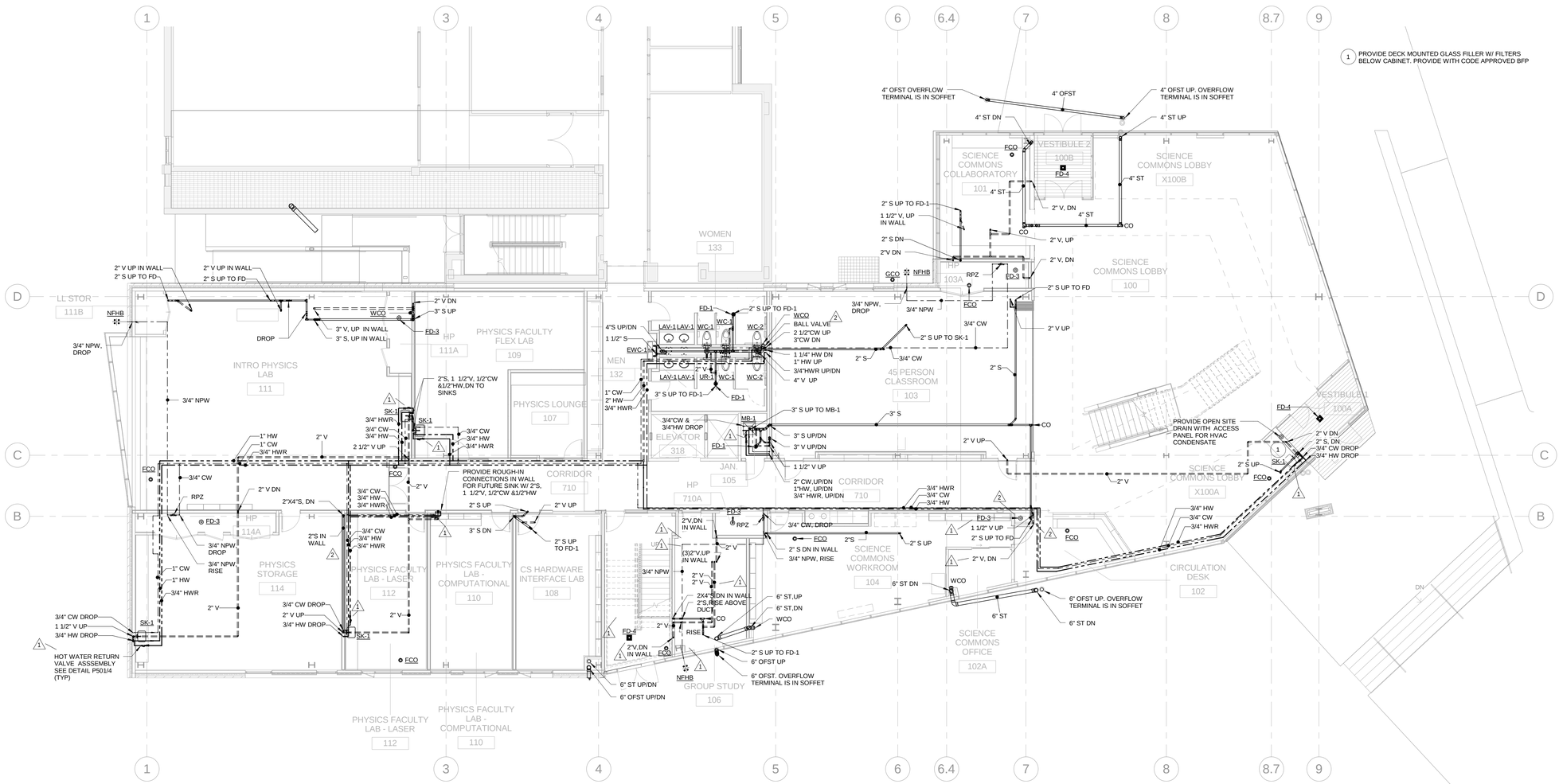

1 FIRST FLOOR - PLUMBING PLAN
1/8" = 1'-0"

boora

Boora Architects Inc.
720 SW Washington Suite 800
Portland, OR 97205
T. 503.226.1575 F. 503.241.7429
www.boora.com

dbHMS
design build engineering
303 W. Erie Street, Suite 510 Chicago, IL 60654
office: 312.915.0557
fax: 312.915.0558
website: www.dbhms.com

BENJAMIN RUBACH REGISTERED No. PE11100371 STATE OF INDIANA PROFESSIONAL ENGINEER

Earlham College Science Complex Phase 2

801 National Road West
Richmond, IN 47374-4095

MARK	DATE	DESCRIPTION
2	1.28.2014	Addendum 3
1	1.15.2014	Addendum 2

Issued: February 28, 2014
Scale: 1/8" = 1'-0"

Copyright

CONFORMED SET

FIRST FLOOR PLAN - PLUMBING

P101

2/26/2014 5:07:10 PM

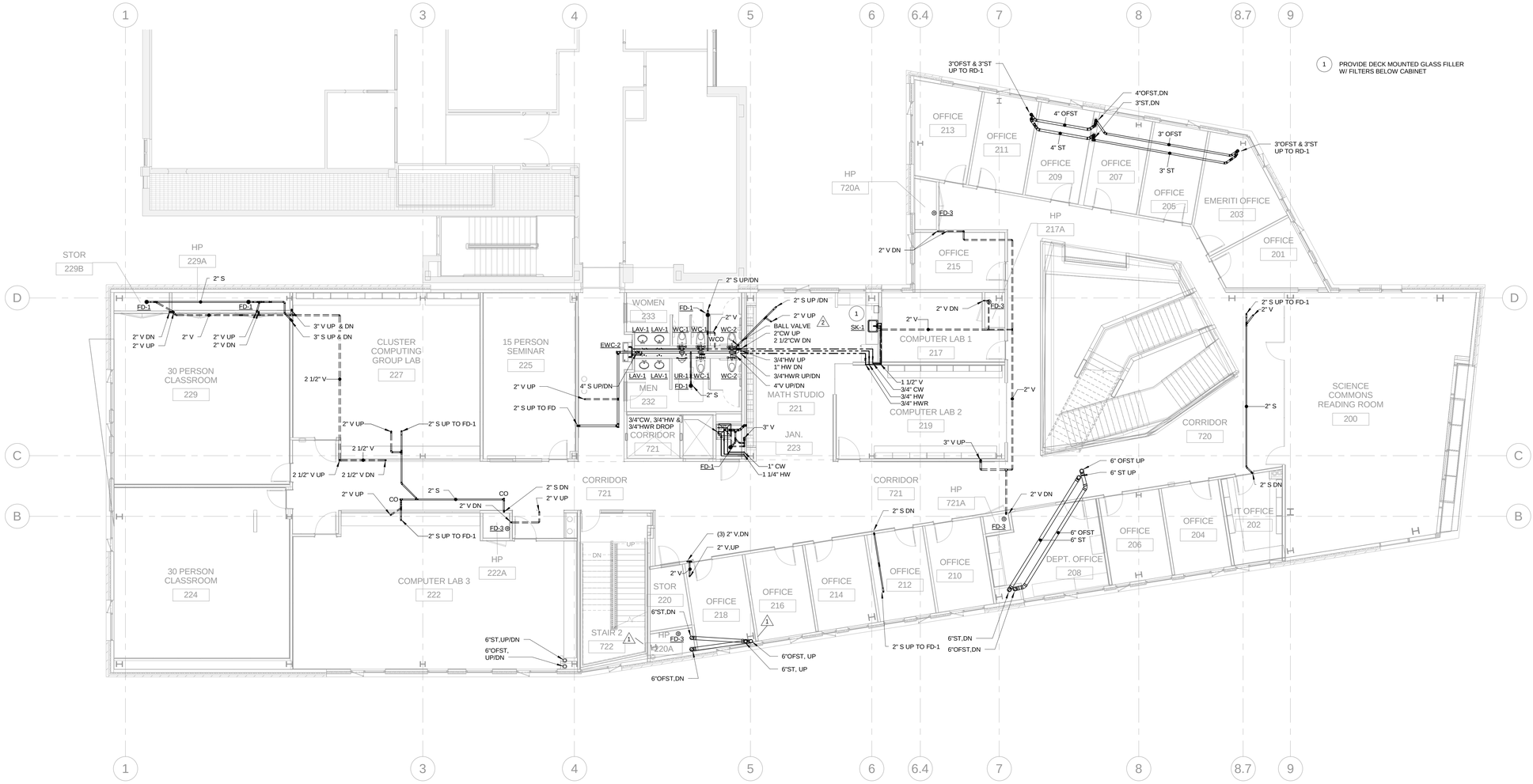

1 SECOND FLOOR - PLUMBING PLAN
1/8" = 1'-0"

boora

Boora Architects Inc.
720 SW Washington Suite 800
Portland, OR 97205
T. 503.226.1575 F. 503.241.7429
www.boora.com

dbHMS
design build engineering
303 W. Erie Street, Suite 510 Chicago, IL 60654
office: 312.915.0557
fax: 312.915.0558
website: www.dbhms.com

BENJAMIN RUBACH REGISTERED No. PE11100371 STATE OF INDIANA PROFESSIONAL ENGINEER

Earlham College Science Complex Phase 2

801 National Road West
Richmond, IN 47374-4095

MARK	DATE	DESCRIPTION
2	1.28.2014	Addendum 3
1	1.15.2014	Addendum 2

Issued: February 28, 2014
Scale: 1/8" = 1'-0"

Copyright

CONFORMED SET

SECOND FLOOR PLAN - PLUMBING

P102

2/26/2014 5:07:20 PM

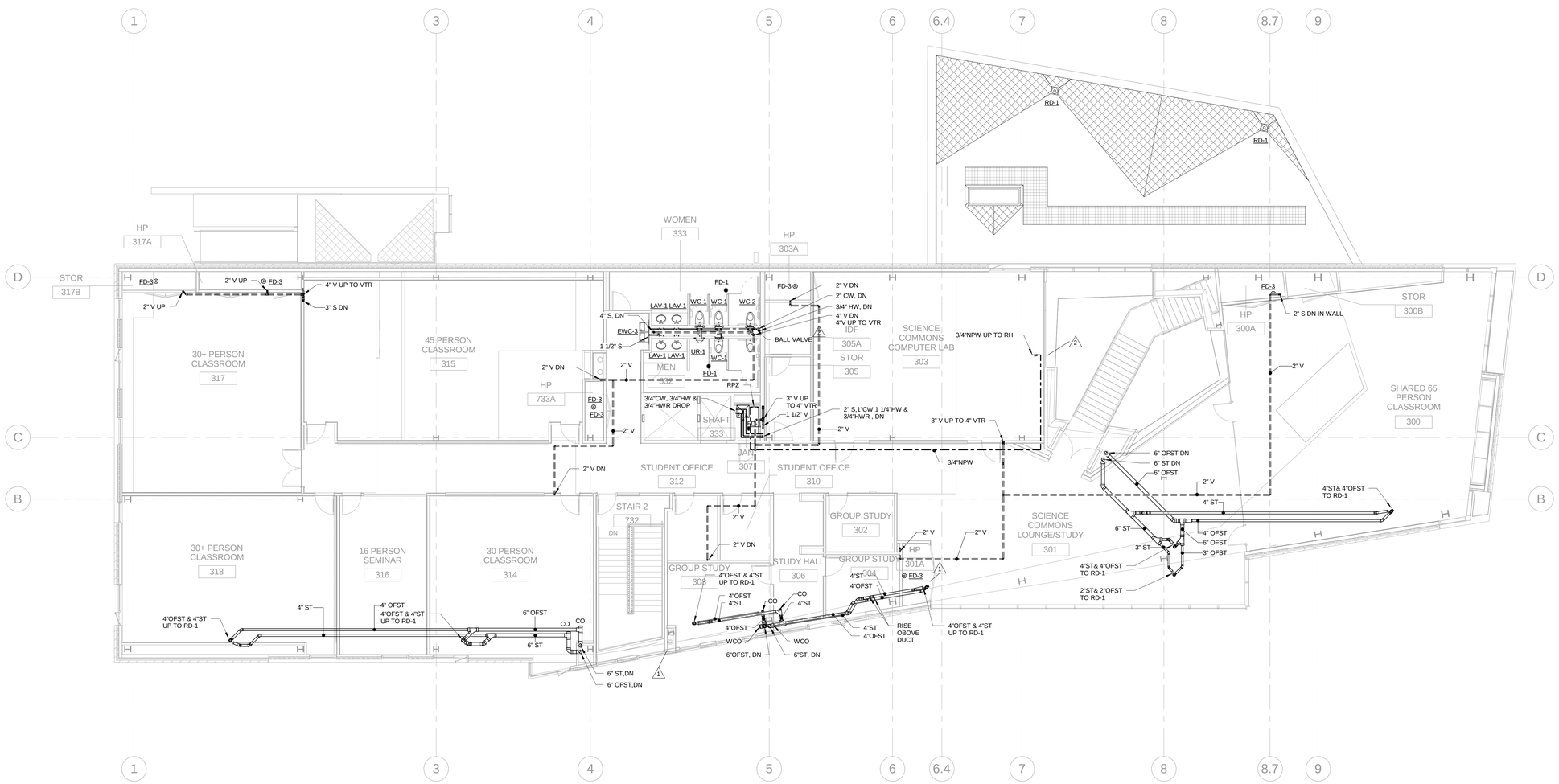

1 THIRD FLOOR - PLUMBING PLAN
1/8" = 1'-0"

boora

Boora Architects Inc.
720 SW Washington Suite 800
Portland, OR 97205
T. 503.226.1575 F. 503.241.7429
www.boora.com

dbHMS
design build engineering
303 W. Erie Street, Suite 510 Chicago, IL 60654
office: 312.915.0557
fax: 312.915.0558
website: www.dbhms.com

BENJAMIN RUBACH REGISTERED No. PE11100371 STATE OF INDIANA PROFESSIONAL ENGINEER

Earlham College Science Complex Phase 2

801 National Road West
Richmond, IN 47374-4095

MARK	DATE	DESCRIPTION
2	1.28.2014	Addendum 3
1	1.15.2014	Addendum 2

Issued: February 28, 2014
Scale: 1/8" = 1'-0"

Copyright

CONFORMED SET

THIRD FLOOR PLAN - PLUMBING

P103

2/26/2014 5:07:34 PM

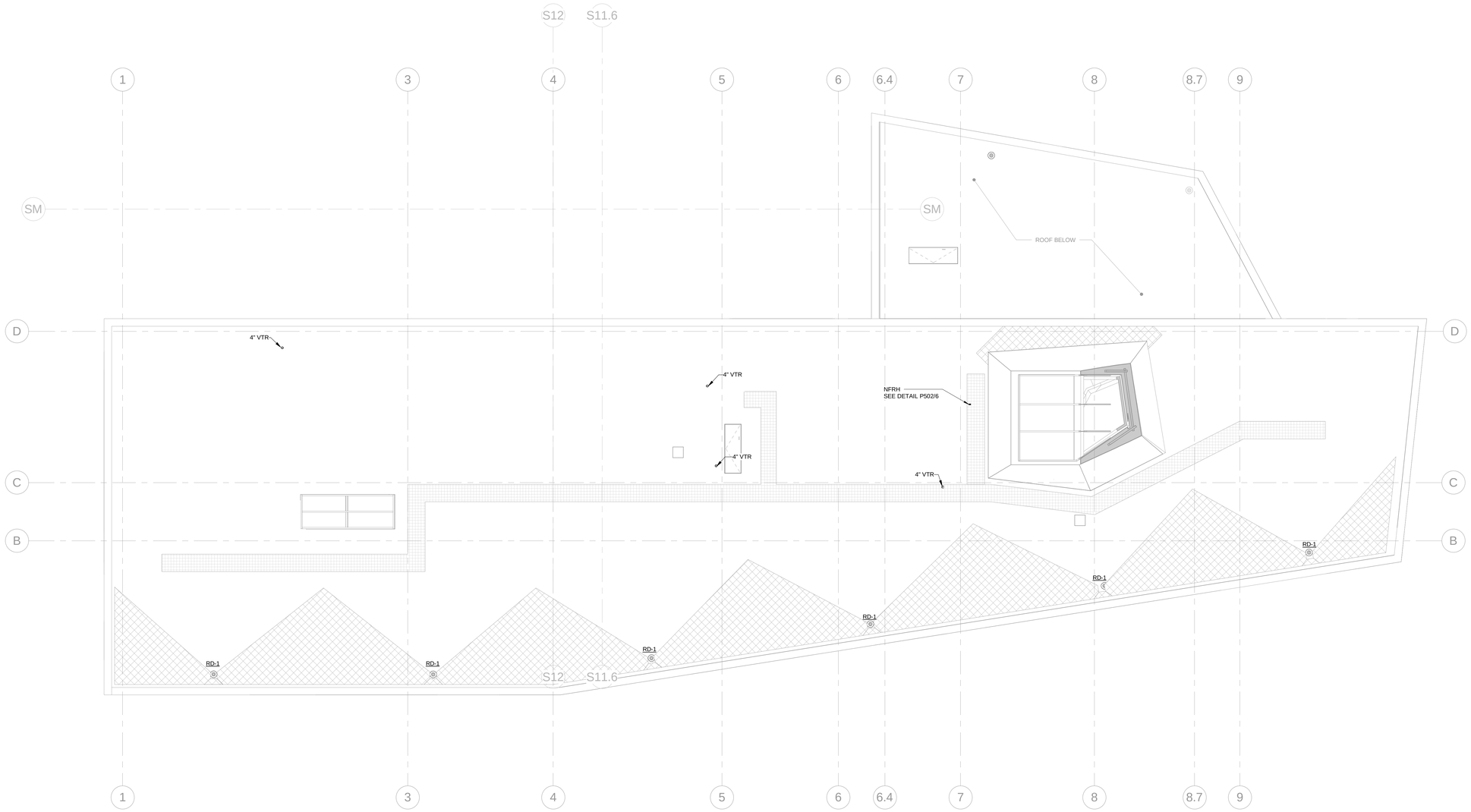

1 ROOF - PLUMBING PLAN
1/8" = 1'-0"

2/26/2014 5:07:42 PM

N

boora

Boora Architects Inc.
720 SW Washington Suite 800
Portland, OR 97205
T. 503.226.1575 F. 503.241.7429
www.boora.com

dbHMS
design build engineering
303 W. Erie Street, Suite 510 Chicago, IL 60654
office: 312.915.0557
fax: 312.915.0558
website: www.dbhms.com

BENJAMIN RUBACH
REGISTERED
No. PE11100371
STATE OF
INDIANA
PROFESSIONAL ENGINEER

Earlham College Science Complex
Phase 2

801 National Road West
Richmond, IN 47374-4095

MARK	DATE	DESCRIPTION

Issued: February 28, 2014
Scale: 1/8" = 1'-0"

Copyright

CONFORMED SET

UPPER ROOF PLAN - PLUMBING

P104

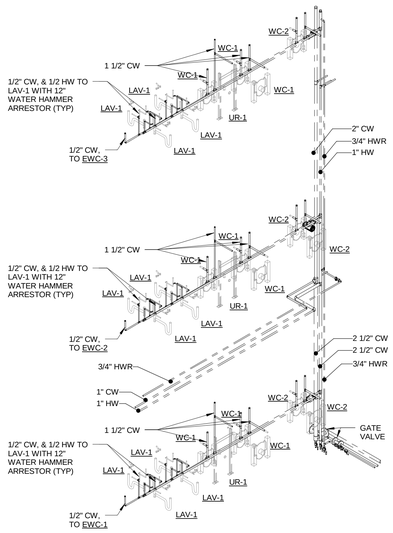

1 SUPPLY RISER DIAGRAM

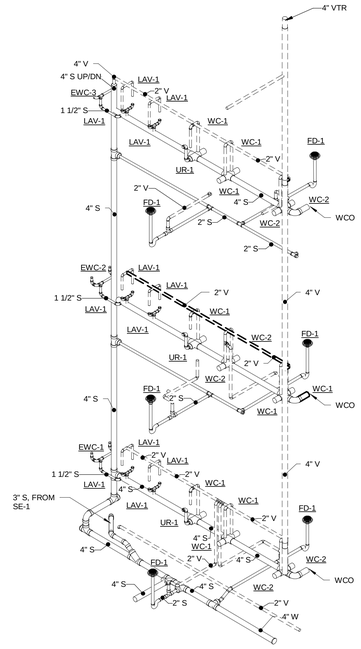

2 WASTE RISER DIAGRAM- WASHROOM

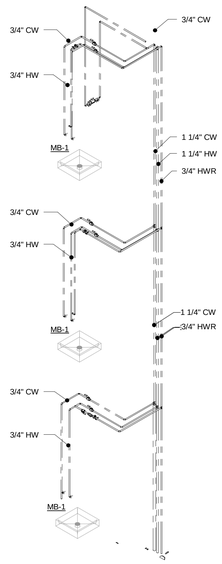

3 JANITOR'S CLOSET SUPPLY RISER DIAGRAM

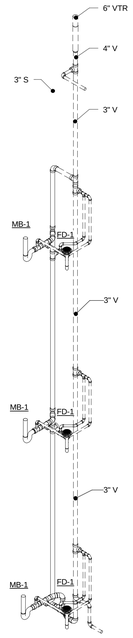

4 JANITOR'S CLOSET WASTE RISER DIAGRAM

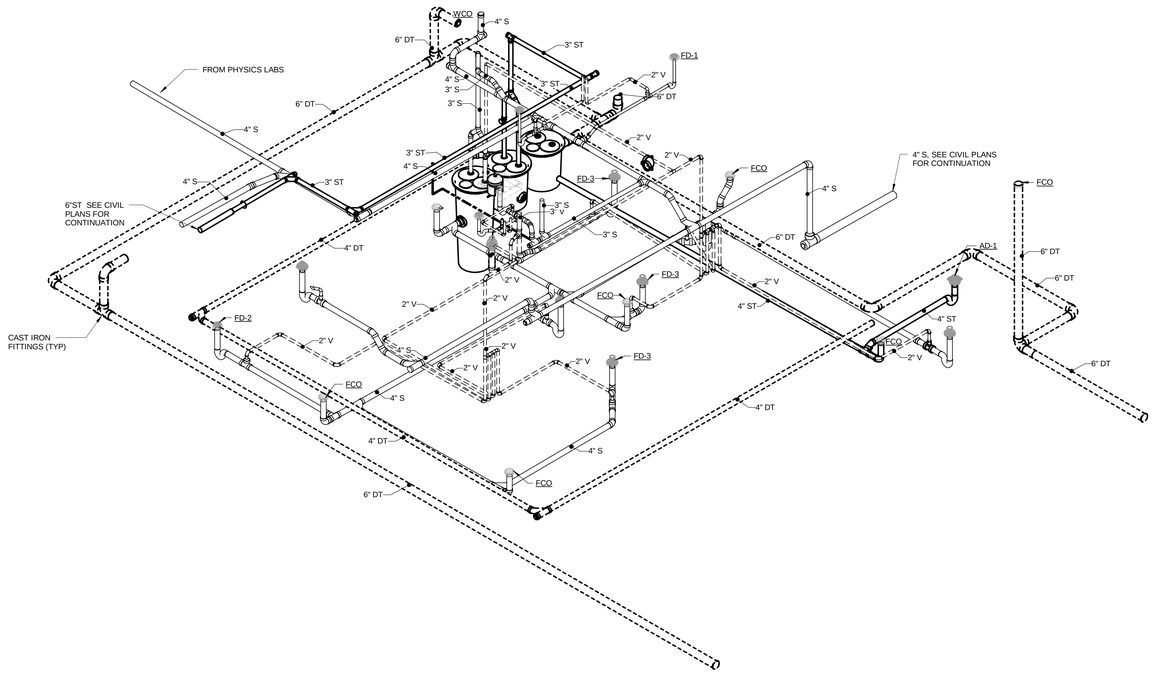

6 MECHANICAL ROOM WASTE RISER DIAGRAM

boora

Boora Architects Inc.
720 SW Washington Suite 800
Portland, OR 97205
T. 503.226.1575 F. 503.241.7429
www.boora.com

dbHMS
design build engineering
303 W. Erie Street, Suite 510 Chicago, IL 60654
office: 312.915.0557
fax: 312.915.0558
website: www.dbhms.com

BENJAMIN RUBACH REGISTERED No. PE11100371 STATE OF INDIANA PROFESSIONAL ENGINEER

Earlham College Science Complex
Phase 2
801 National Road West
Richmond, IN 47374-4095

MARK	DATE	DESCRIPTION

Issued: February 28, 2014
Scale: NTS

Copyright

CONFORMED SET

PLUMBING RISER DRIAGRAMS

P401

2/26/2014 5:22:01 PM

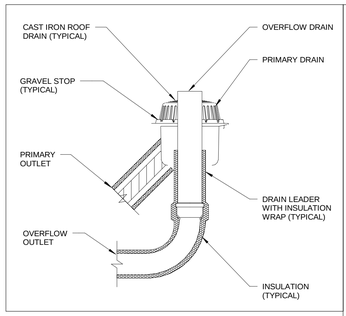

12 TYPICAL ROOF DRAIN DETAIL
NOT TO SCALE

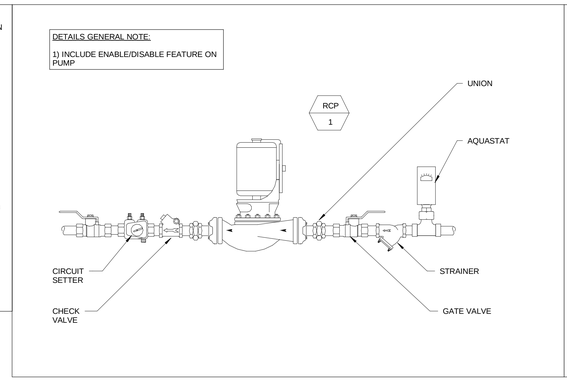

9 RECIRCULATION PUMP DETAIL
NOT TO SCALE

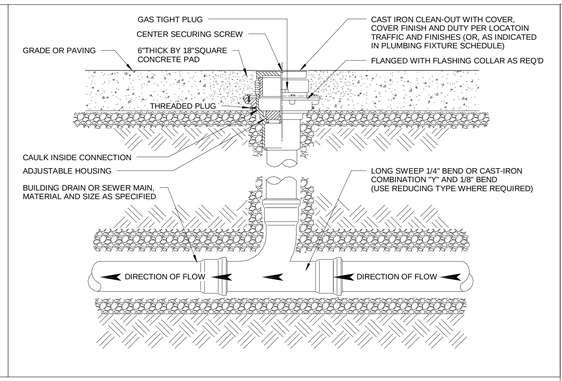

5 TYPICAL FLOOR CLEAN-OUT DETAIL
NOT TO SCALE

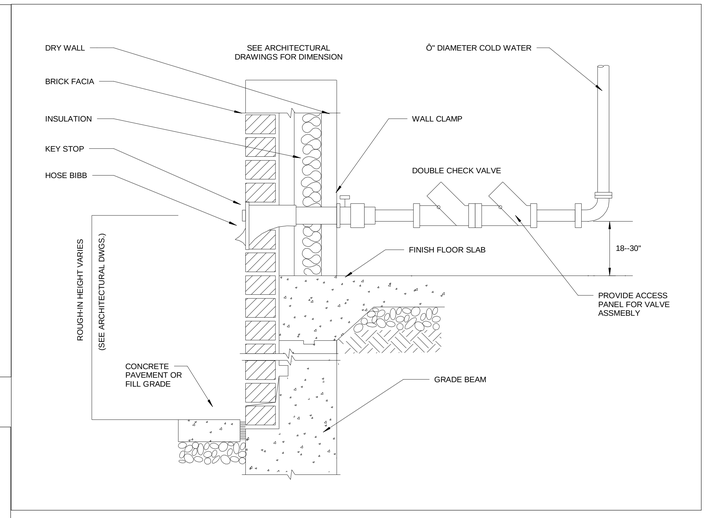

1 WALL HYDRANT DETAIL
NOT TO SCALE

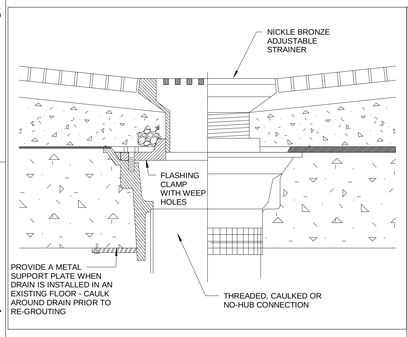

13 TYPICAL FLOOR DRAIN DETAIL
NOT TO SCALE

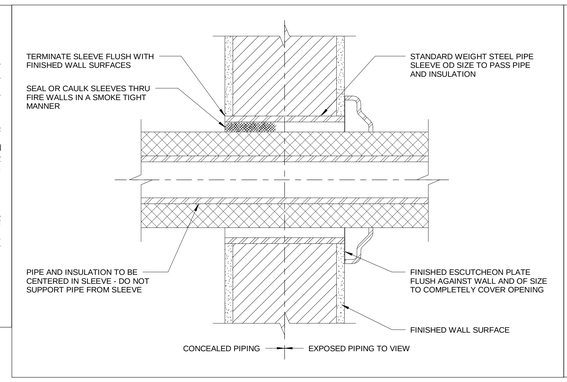

10 PIPE SLEEVE THROUGH INTERIOR WALLS
NOT TO SCALE

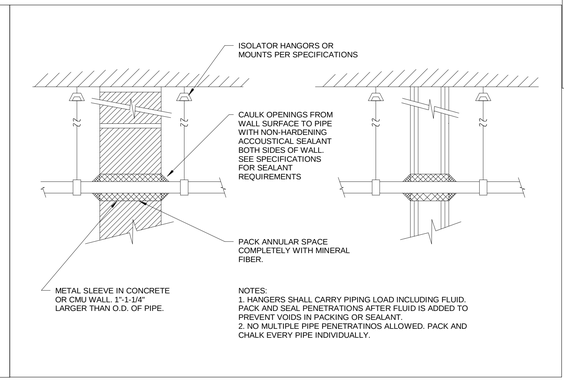

NOTES:
1. HANGERS SHALL CARRY PIPING LOAD INCLUDING FLUID. PACK AND SEAL PENETRATIONS AFTER FLUID IS ADDED TO PREVENT VOIDS IN PACKING OR SEALANT.
2. NO MULTIPLE PIPE PENETRATINOS ALLOWED. PACK AND CHALK EVERY PIPE INDIVIDUALLY.

6 RESILIENTLY SEALED PIPING PENETRATION DETAILS
NOT TO SCALE

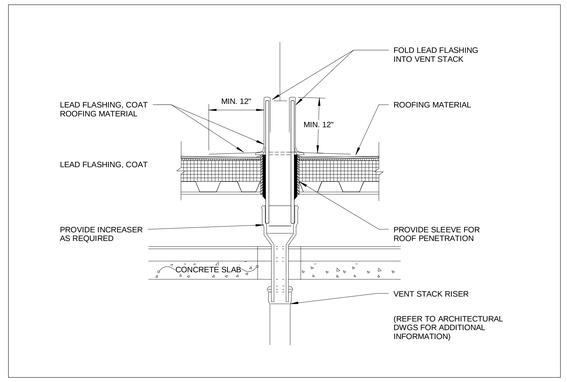

2 ROOF PLUMBING VENT DETAIL- AT NEW ROOF AREAS
NOT TO SCALE

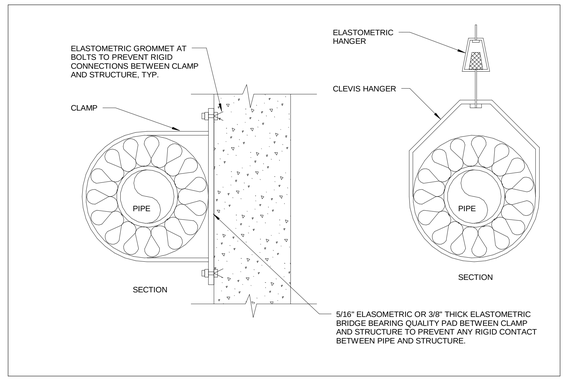

7 RESILIENTLY PIPING SUPPORT FOR CLAMP & CLEVIS HUNG PIPE DETAIL
NOT TO SCALE

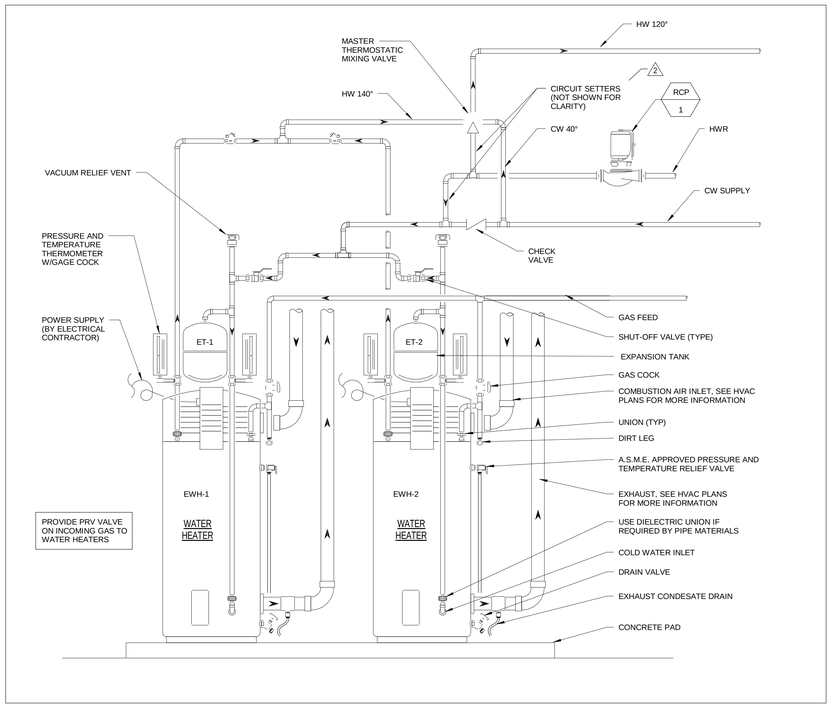

11 WATER HEATER DETAIL
NOT TO SCALE

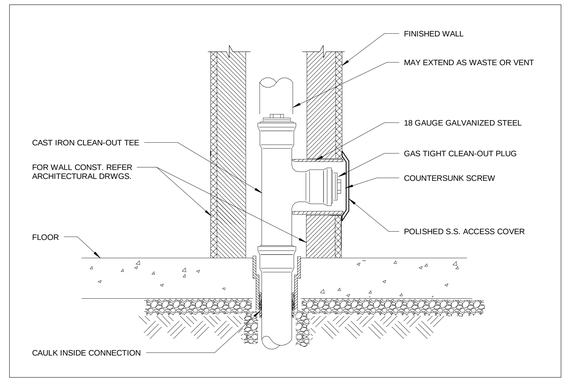

3 TYPICAL WALL CLEAN-OUT DETAIL
NOT TO SCALE

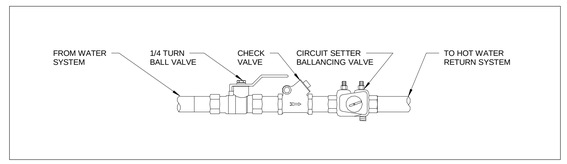

4 HOT WATER RETURN VALVE ASSEMBLY
NOT TO SCALE

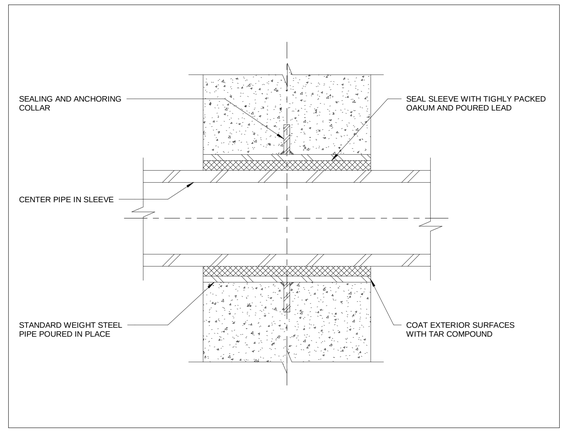

8 PIPE SLEEVE THROUGH EXTERIOR WALLS
NOT TO SCALE

boora

Boora Architects Inc.
720 SW Washington Suite 800
Portland, OR 97205
T. 503.226.1575 F. 503.241.7429
www.boora.com

dbHMS
design build engineering
303 W. Erie Street, Suite 510 Chicago, IL 60654
office: 312.915.0557
fax: 312.915.0558
website: www.dbhms.com

BENJAMIN RUBACH REGISTERED No. PE11100371 STATE OF INDIANA PROFESSIONAL ENGINEER

Earlham College Science Complex
Phase 2
801 National Road West
Richmond, IN 47374-4095

MARK	DATE	DESCRIPTION
2	1.28.2014	Addendum 3
1	1.15.2014	Addendum 2

Issued: February 28, 2014
Scale: NTS

Copyright

CONFORMED SET

PLUMBING DETAILS

P501

2/26/2014 5:08:03 PM

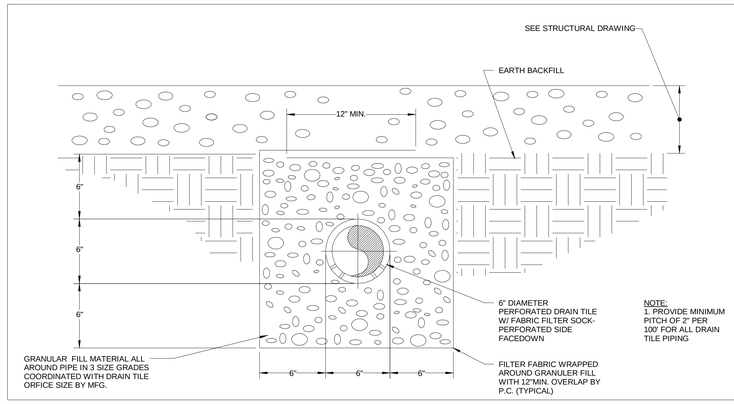

4 PERFORATED TRENCH DRAIN TILE DETAIL
NOT TO SCALE

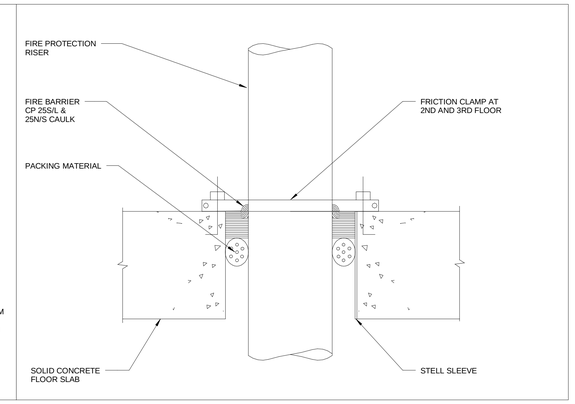

1 PENETRATION FIRESTOP FOR 6" MAX. DIAMETER METAL PIPE THROUGH CONCRETE FLOOR
NOT TO SCALE

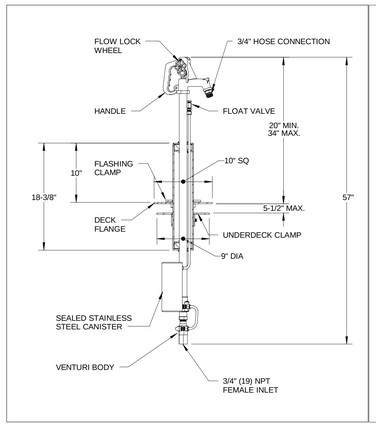

6 ROOF HYDRANT DETAIL
NOT TO SCALE

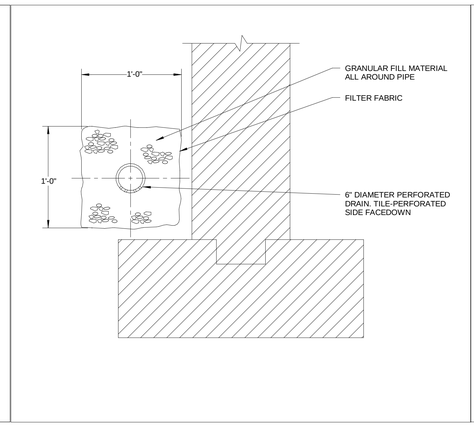

5 SUSOIL DRAINAGE INSTALLATION DETAIL
NOT TO SCALE

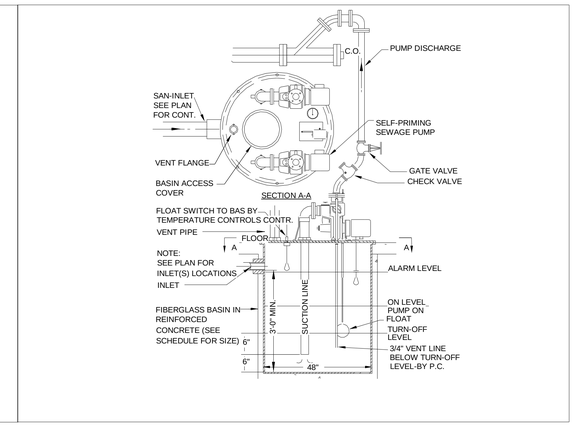

2 SEWEGE EJECTOR
NOT TO SCALE

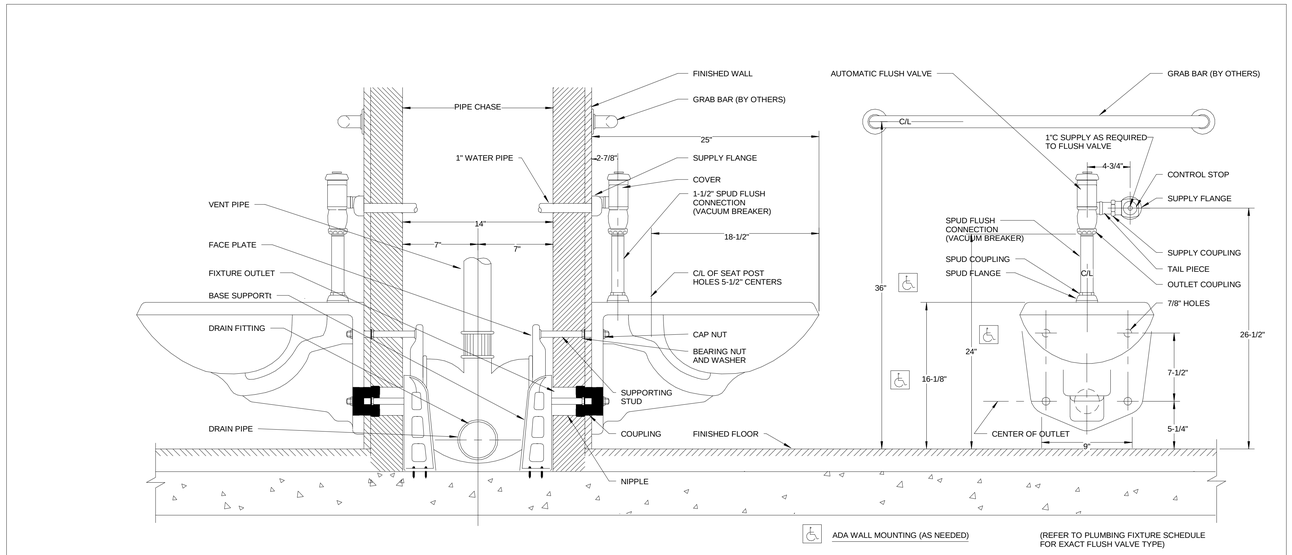

3 TYPICAL WALL MOUNTED BACK-TO-BACK WC WITH CARRIER DETAIL
NOT TO SCALE

boora

Boora Architects Inc.
720 SW Washington Suite 800
Portland, OR 97205
T. 503.226.1575 F. 503.241.7429
www.boora.com

dbHMS
design build engineering
303 W. Erie Street, Suite 510 Chicago, IL 60654
office: 312.915.0557
fax: 312.915.0558
website: www.dbhms.com

BENJAMIN RUBACH REGISTERED No. PE11100371 STATE OF INDIANA PROFESSIONAL ENGINEER

Earlham College Science Complex
Phase 2
801 National Road West
Richmond, IN 47374-4095

MARK	DATE	DESCRIPTION

Issued: February 28, 2014
Scale: NTS

Copyright

CONFORMED SET

PLUMBING DETAILS

P502

2/26/2014 5:08:05 PM

WATER HEATER (WH) SCHEDULE

TAG	LOCATION	HEATER TYPE	CAPACITY (GAL)	HEATING (BTU/HR)		RECOVERY GPH 100° (F) RISE	DIMENSIONS		ELECTRICAL		MANUFACTURER	MODEL NUMBER	NOTES
				INPUT	OUTPUT		DIA (IN)	HT (IN)	VOLTS/PH/HZ	BLOWER/IGNITER (AMPS)			
WH-1	MECHANICAL ROOM	POWER DIRECT VENT WATER HEATER	50	100000	96000	116	22	66-3/4	120/1/60	<5	AO SMITH	BTX-100	1, 2, 3, 4, 5, 6, 7
WH-2	MECHANICAL ROOM	POWER DIRECT VENT WATER HEATER	50	100000	96000	116	22	66-3/4	120/1/60	<5	AO SMITH	BTX-100	1, 2, 3, 4, 5, 6, 7

NOTES:
1. DISCONNECT SWITCHES AND POWER SOURCE FURNISHED AND INSTALLED BY ELECTRICAL CONTRACTOR.
2. EXCEED ASHRAE ENERGY STDS.
3. EQUIP WITH TEMPERATURE AND PRESSURE RELIEF VALVE PIPED TO FLOOR DRAIN.
4. EQUIP WITH EXPANSION TANK PER MANUFACTURE REQUIREMENTS.
5. PROVIDE HEAT TRAPS/NIPPLES ON CONNECTIONS TO HEATER.
6. PROVIDE MANUFACTURE APPROVED CONCRETE PAD.
7. PROVIDE EACH WATER HEATER WITH GAS PRV VALVE.

DUPLEX SEWAGE EJECTOR (SE) SCHEDULE

TAG	LOCATION	TYPE	CAPACITY (GPM)	TDH	ELECTRICAL (EACH)			MANUFACTURER	MODEL NUMBER	NOTES
					HP PER PUMP	RPM	V/PH/HZ			
SE-1	MECHANICAL ROOM	DUPLEX SEWAGE EJECTOR	20	20	1/3	3450	208/3/60	ZOELLER	N270	1, 2, 3

NOTES:
1. PROVIDE PUMP RUN INDICATOR LIGHT, HIGH WATER ALARM, SELECTOR SWITCHES, THREE VARIABLE LEVEL MECHANICAL FLOAT SWITCHES AND UL LABEL.
2. PROVIDE DUPLEX CONTROL PANEL, ZOELLER MODEL# 10-1045.
3. PROVIDE 36" DIA. x 54" DEEP SUMP PIT

DUPLEX SUMP PUMP (SP) SCHEDULE

TAG	LOCATION	TYPE	CAPACITY (GPM)	TDH	ELECTRICAL (EACH)			MANUFACTURER	MODEL NUMBER	NOTES
					HP	RPM	V/PH/HZ			
SP-1	MECHANICAL ROOM	DUPLEX SUMP PUMP	100 (EA)	28	2 1/2	1725	208/3/60	WEIL	2400-DS	1, 2, 3

NOTES:
1. PROVIDE 36"x84" SUMP PIT AND 36"X36" SETTLING BASIN. PROVIDE WITH DUPLEX STEEL COVER INCLUDING PUMP ACCESS PLATES WITH DISCHARGE FLANGE AND CABLE SLOT, VENT FLANGE AND INSPECTION OPENING.

2. PROVIDE A WEIL PUMP SERIES 8100 NEMA1, DUPLEX, UL LISTED, WITH A MAIN DISCONNECT, TRANSFORMER, STARTERS, O.L. BLOCKS, H-O-A SWITCH, RUN LIGHT AND ALARM HORN AND LIGHT WITH SILENCE BUTTON AND DRY REMOTE ALARM CONTACTS. FLOAT CONTROL SHALL BE, (1) WEIL PUMP MODEL 8200 PEDESTAL FLOAT SWITCH TO CONTROL PUMP "OFF", "ON", AND "HIGH WATER ALARM" LEVEL. CONTRACTOR SHALL PROVIDE ALL ELECTRICAL JUNCTION BOXES AS NECESSARY BETWEEN THE PUMP BASIN AND CONTROL PANEL.

3. PROVIDE CHECK VALVES AND SHUT OFF VALVES.

ELECTRIC WATER COOLER (EWC) SCHEDULE

TAG	FIXTURE	MOUNTING	MATERIAL	DIMENSIONS	ELECTRICAL		MANUFACTURER	MODEL NUMBER	NOTES
					FLA	V/PH/HZ			
EWC-1	DUAL HEIGHT FOUNTAIN	WALL	STAINLESS STEEL	14" ROUND BOWL & 18-5/8" PROJECTION	4.6	115/1/60	OASIS	P8SBFSL	1, 2
EWC-2	DUAL HEIGHT FOUNTAIN	WALL	STAINLESS STEEL	14" ROUND BOWL & 18-5/8" PROJECTION	4.6	115/1/60	OASIS	P8SBFSL	1, 2
EWC-3	DUAL HEIGHT FOUNTAIN	WALL	STAINLESS STEEL	14" ROUND BOWL & 18-5/8" PROJECTION	4.6	115/1/60	OASIS	P8SBFSL	1, 2

NOTES:
1. BOTTLE FILLER WITH INDEPENDENT MANUAL ACTIVATION; STAINLESS STEELTOP FLEXIBLE BUBBLER GUARD, FOUR PUSH PAD ACTIVATION.
2. FILLER CABINET FINISH TO BE BRUSHED STAINLESS STEEL.

RECIRCULATION PUMP SCHEDULE

TAG	LOCATION	DESCRIPTION	CAPACITY (GPM)	TDH	ELECTRICAL			MANUFACTURER	MODEL NUMBER	NOTES
					HP	RPM	V/PH/HZ			
RCP-1	MECHANICAL	HOT WATER RECIRCULATION	3	42	1/3	130	115/1/60	B&G	NBF-36	1

NOTES:
1. 3/4" ALL BRONZE PUMP. INCLUDE AQS-3/4 AQUASTAT FOR PUMP

THERMOSTATIC MIXING VALVE (TMV) SCHEDULE

TAG	LOCATION	FIXTURE/ EQUIPMENT	OUTLET TEMP. (°F)	FLOW AT ΔP (GPM@PSI)	MIN FLOW (GPM)	MANUFACTURE	MODEL	NOTES
TMV-1	LAVATORY SUPPLY PIPES	LAVATORIES	105	4@5	0.25	LEONARD	170	PROVIDE THERMOSTATIC MIXING VALVE ON ALL LAVATORIES AND HAND WASH SINKS.
TMV-2	MECHANICAL ROOM	WH-1/WH-2	120	50@2	-	HOLBY	HOLBY TEMPERING VALVE	INSTALL MIXING VALVE PER MANUFACTURERS RECOMMENDATIONS, INCLUDING ANY ADDITIONAL VALVING, GAUGES AND PIPING.

NOTES:

MOP BASIN (MB) SCHEDULE

TAG	TYPE	MANUFACTURE	MODEL	FAUCET TYPE	MANUFACTURE	FAUCET MODEL	NOTES
MB-1	24"x24"x12" FLOOR MTD ONE PIECE CAST WHITE CEMENT	CREATIVE INDUSTRIES	MC2424-6	WALL MTD MANUAL	CHICAGO FAUCET	911-CP	1, 2, 3

NOTES:
1. FAUCET TO BE POLISHED CHROME PLATED SOLID BRASS CONSTRUCTION WITH INTEGRAL VACUUM BREAKER MOUNTED 7'-6" A.F.F.
2. PROVIDE CREATIVE INDUSTRIES WALL GUARDS, MODEL# S.S.W.G.-24x24

WATER CLOSET (WC) SCHEDULE

TAG	TYPE	GPF	MANUFACTURE	MODEL	VALVE TYPE	VALVE MANUFACTURE	VALVE MODEL	NOTES
WC-1	WALL MOUNTED	1.28	ZURN	Z5615 HET	EXPOSED, BATTERY POWERED, SENSOR OPERATED	SLOAN	8111-1.28	1
WC-2	WALL MOUNTED	1.28	ZURN	Z5615 HET	EXPOSED, BATTERY POWERED, SENSOR OPERATED	SLOAN	8111-1.28	1, 2

NOTES:
1. FLUSHOMETER TOILET, PROVIDE OPEN FRONT LESS ZURN TOILET SEAT MODEL Z5955SS-EL.
2. MOUNT AT ADA HEIGHT

URINAL (UR) SCHEDULE

TAG	TYPE	GPF	MANUFACTURE	MODEL	VALVE TYPE	VALVE MANUFACTURE	VALVE MODEL	NOTES
UR-1	WALL MOUNTED TOP SPUD	0.125	ZURN	Z5798	EXPOSED, BATTERY OPERATED SENSOR OPERATED	SLOAN	OPTIMA 8186-0.125	1

NOTES:
1. 0.125 GPF LOW FLOW VIRTUOUS CHINA, MOUNTED TO ADA REQUIREMENTS, COLOR #01 COTTON.

LAVATORY (LAV) SCHEDULE

TAG	TYPE	GPM	MANUFACTURE	MODEL	FAUCET TYPE	FAUCET MANUFACTURE	FAUCET MODEL	NOTES
LAV-1	19"x16" UNDERMOUNT LAVATORY	0.35	ZURN	Z5220	SENSORED DECK MOUNTED, HARD WIRED	SLOAN	ETF-80	1, 2
LAV-2	19"x16" UNDERMOUNT LAVATORY	0.35	ZURN	Z5220	SENSORED DECK MOUNTED, HARD WIRED	SLOAN	ETF-80	1, 2, 3

NOTES:
1. STAINLESS STEEL UNDERMOUNT LAVATORY WITH OVERFLOW. PROVIDE 0.35 GPM AERATOR.
2. PROVIDE COPPER WATER SUPPLY TUBING.
3. PROVIDE WITH LAV GUARDS.

FLOOR DRAIN SCHEDULE

TAG	FIXTURE	MANUFACTURER	MODEL	APPLICATION	MATERIAL	DIMENSION	NOTES
FD-1	FLOOR DRAIN	MIFAB	F1100	FINISHED FLOORS	CAST IRON	6" ROUND TOP	
FD-2	FLOOR DRAIN	MIFAB	F1100-C-ER-1	MECHANICAL ROOM	CAST IRON	7" ROUND TOP	
FD-3	FUNNEL FLOOR DRAIN	MIFAB	F1100-EF-3	HEAT PUMP CLOSETS	CAST IRON	5" ROUND TOP	
FD-4	AREA DRAIN	MIFAB	F1000S	VESTIBULES	CAST IRON	5"X5" SQUARE	

NOTES:
1. PROVIDE WITH MI-GUARD-2 INLINE FLOOR DRAIN TRAP SEAL WITH ABS PLASTIC FRAME, SILICON RUBBER SEALING FLAPPER AND FOUR FLEXIBLE SEALING RIBS

ROOF DRAIN (RD) SCHEDULE

TAG	FIXTURE	MANUFACTURER	MODEL	MATERIAL	DIMENSION	NOTES
RD-1	BI-FUNCTIONAL ROOF DRAIN	FROET	100C4	CAST IRON	14" ROUND TOP ASSEMBLY	1

NOTES:
1. PROVIDE STANDARD OVERFLOW STRAINER.
2. LACQUERED CAST IRON ROOF DRAIN WITH METAL STRAINER

HOSE BIB (HB/NFHB) SCHEDULE

TAG	FIXTURE	HOSE CONNECTION (IN)	INLET CONNECTION (IN)	MANUFACTURE	MODEL	NOTES
NFHB	NON-FREEZE HOSE BIB	3/4	3/4 MALE	MIFAB	MHY-20	1, 2

NOTES:
1. BRONZE NICKEL PLATED QUARTER TURN NON-FREEZE HYDRANT, INTEGRAL VACUUM BREAKER WITH VANDAL RESISTANT CAP AND "T" HANDLE.
2. SPECIFY WALL THICKNESS WHEN ORDERING, SEE MFR. SPECIFICATIONS PRIOR TO ORDERING.

ROOF HYDRANT (RH) SCHEDULE

TAG	FIXTURE	HOSE CONNECTION (IN)	INLET CONNECTION (IN)	MANUFACTURE	MODEL	NOTES
NFRH	NON-FREEZE ROOF HYDRANT	3/4	3/4 MALE	MURDOCK	M-3903	1

1. NON-FREEZE SANITARY (SELF CONTAINED) ROOF HYDRANT W/ GALVANIZED CASING,ADJUSTABLE FLOW,WHEEL LOCK HANDLE , SEALED STAINLESS STEEL CANISTER, VENTURI AND ROOF MOUNT ASEMBLY .

SINK (SK) SCHEDULE

TAG	TYPE	GPM	MANUFACTURE	MODEL	FAUCET TYPE	FAUCET MANUFACTURE	FAUCET MODEL	NOTES
SK-1	18"x14"x6"ID DROP IN SINGLE BOWL SINK	1.5	ELKAY	LRAD2219	DECK MOUNTED 8" CENTER	CHICAGO FAUCET	1100-GN8AE35-317ABCP	1, 2,3,4

NOTES:
1. DECK MOUNTED 8" FIXED CENTERS, 8" RIGID/SWING GOOSENECK SPOUT, 4"WRIST BLADE HANDLE.
2. #18 GAUGE, TYPE 304 STAINLESS STEEL SINK, SELF-RIMMING SINGLE BOWL SINK
3. PROVIDE WITH 1.5 GPM AERATOR
4. PROVIDE WITH LAV GUARDS

boora

Boora Architects Inc.
720 SW Washington Suite 800
Portland, OR 97205
T. 503.226.1575 F. 503.241.7429
www.boora.com

dbHMS
design build engineering
303 W. Erie Street, Suite 510 Chicago, IL 60654
office: 312.915.0557
fax: 312.915.0558
website: www.dbhms.com

BENJAMIN RUBACH REGISTERED No. PE11100371 STATE OF INDIANA PROFESSIONAL ENGINEER

Earlham College Science Complex
Phase 2
801 National Road West
Richmond, IN 47374-4095

MARK	DATE	DESCRIPTION
2	1.28.2014	Addendum 3
1	1.15.2014	Addendum 2

Issued: February 28, 2014
Scale: NTS

Copyright

CONFORMED SET

PLUMBING SCHEDULES

P601

2/26/2014 5:08:09 PM