## SITE PLANTING NOTES:

1. IN CASE OF DISCREPANCIES BETWEEN THE PLAN AND PLANT LIST, THE PLAN SHALL DICTATE. IF PLANT IDENTIFICATION BOX QUANTITY SHOWN ON PLAN DIFFERS FROM GRAPHIC PLANT CIRCLE COUNT, THE GRAPHIC CIRCLE COUNT SHALL DICTATE. IF IN QUESTION CONTACT THE LANDSCAPE ARCHITECT.
2. LANDSCAPE ARCHITECT WILL APPROVE FINAL PLACEMENT OF PLANT MATERIAL, BEFORE PLANTING OPERATIONS ARE TO PROCEED. MARK TREE LOCATIONS WITH WOODEN STAKES INDICATING TREE VARIETY AND SIZE. DESIGNATE GROUND COVER AND MULCH BED LINES WITH A WOOD STAKES FOR REFERENCE. STAKES SHALL BE REMOVED FOLLOWING PLANTING OPERATIONS. LANDSCAPE ARCHITECT RESERVES THE RIGHT TO ADJUST PLANT LOCATIONS ON SITE. REINSTALL ANY PLANT MATERIAL LOCATED INCORRECTLY (IN THE JUDGMENT OF THE LANDSCAPE ARCHITECT) UPON THE CONTRACTOR'S DISREGARD FOR STAKING, AT NO COST TO THE OWNER.
3. NO SUBSTITUTION OF PLANT MATERIAL IS ALLOWED. IF PLANTS ARE SHOWN TO BE UNAVAILABLE, NOTIFY LANDSCAPE ARCHITECT PRIOR TO BID DATE IN WRITING. PLANTS SHALL BE INSPECTED AND TAGGED WITH PROJECT IDENTIFICATION AT NURSERY OR CONTRACTOR'S OPERATION PRIOR TO MOVING TO JOB SITE. PLANTS MAY ALSO BE INSPECTED AND APPROVED OR REJECTED AT THE JOB SITE.
4. PLANTS ARE TO MEET OR EXCEED AMERICAN STANDARDS FOR NURSERY STOCK, CURRENT EDITION, AS SET FORTH BY AMERICAN ASSOCIATION OF NURSERYMEN.
5. PLANTS AND OTHER MATERIAL TO BE STORED ON SITE WILL BE PLACED WHERE THEY WILL NOT CONFLICT WITH CONSTRUCTION OPERATIONS.
6. PLANTING BEDS SHALL HAVE A SPADED EDGE TO A DEPTH EQUAL TO SPECIFIED MULCH THICKNESS, UNLESS OTHERWISE NOTED.

## SITE GRADING & DRAINAGE NOTES:

1. VERIFY GRADES IN FIELD AND REPORT ANY DISCREPANCIES IMMEDIATELY TO THE LANDSCAPE ARCHTIECT/ENGINEER.
2. SEE SITE GRADING PLANS AND/OR EROSION CONTROL PLANS FOR EROSION CONTROL TO BE INCORPORATED DURING CONSTRUCTION, IF APPLICABLE (SEE CIVIL DRAWINGS).
3. COORDINATE ALL EARTH MOVING ACTIVITIES WITH EXISTING AND NEW UTILITIES. VERIFY COVER REQUIREMENT WITH UTILITY COMPANIES SO AS TO NOT CAUSE DAMAGE.
4. STABILIZE EARTHEN AREAS DISTURBED DURING CONSTRUCTION. SEE SEASONAL SOIL PROTECTION CHART AND EROSION CONTROL PLAN, IF APPLICABLE (SEE CIVIL DRAWINGS).
5. THE EXCAVATING CONTRACTOR OR LANDSCAPE CONTRACTOR SHALL PREPARE THE FINISH GRADE AT 1/2" BELOW ADJACENT PAVED AREAS. FINISHED GRADES IN PLANTING AREAS SHALL BE 1" LOWER THAN ADJACENT PAVING AND ARE TO INCLUDE 3" MULCH OVER PLANTING SOIL.
6. PRIOR TO FINISH GRADING, CONTRACTORS SHALL MAINTAIN WATER DRAINAGE OFF SITE CONSISTENT WITH DRAWINGS. NO WATER SHALL BE DIVERTED ONTO ADJOINING PROPERTIES DURING ANY PART OF THE GRADING PROCESS.

## DEMOLITION NOTES:

1. IN AREAS WHERE PAVING OR CONCRETE SLABS ARE BEING REMOVED AND LAWN OR PLANTING AREAS ARE PROPOSED, THE CONTRACTOR SHALL EXCAVATE TO SUBGRADE MATERIAL. CONTRACTOR SHALL DISPOSE OF EXCAVATED MATERIAL OFF-SITE AT APPROVED DISPOSAL SITES ONLY, UNLESS OTHERWISE SHOWN.
2. REMOVAL OF EXISTING CONCRETE AND ASPHALT PAVEMENT INDICATED ON PLANS SHALL INCLUDE AGGREGATE BASE AND SUBGRADE MATERIALS. SAWCUT EXISTING PAVED AREAS TO BE REMOVED. CUTS SHALL BE CLEAN NEAT AND TRUE TO LINE.
3. REMOVE NON-ORGANIC MATTER THAT WOULD INTERFERE WITH PROPOSED PLANT MATERIAL. REPLACE EXCAVATED AREAS TO BE PLANTED WITH A MINIMUM OF 12" OF APPROVED TOPSOIL.
4. DEMOLISH AND COMPLETELY REMOVE FROM SITE, EXISTING UNDERGROUND UTILITIES INDICATED TO BE REMOVED UNLESS OTHERWISE NOTED. COORDINATE WITH UTILITY COMPANIES AND OWNER FOR SHUT-OFF SERVICES IF LINES ARE ACTIVE.
5. UNDERGROUND UTILITIES OR STRUCTURES IN PROPOSED PAVEMENT OR BUILDING AREAS REQUIRING REMOVAL SHALL BE BACKFILLED COMPLETELY WITH APPROVED ENGINEERED GRANULAR MATERIAL SUITABLE TO THE LANDSCAPE ARCHITECT / ENGINEER.
6. CONTRACTOR SHALL BE RESPONSIBLE FOR THE PROTECTION OF EXISTING TREES AND SHRUBS DESIGNATED TO REMAIN WITHIN THE LIMITS OF CONSTRUCTION TO THE EXTENT OF THE DRIP LINES. EXISTING TREES SHALL BE FENCED OFF AND NO MATERIALS OR HEAVY EQUIPMENT SHALL ENCROACH FENCED AREAS DURING DEMOLITION AND CONSTRUCTION. REFER TO L100, TREE PRESERVATION & DEMOLITION PLAN
7. REMOVE AND DISPOSE OF DEBRIS IN A LEGAL MANNER.
8. MAINTAIN DUST CONTROL WITH WATER AT ALL TIMES. METER INSTALLATION AND WATER COSTS ARE THE RESPONSIBILITY OF THE CONTRACTOR.
9. CATCH BASINS, SEWER INLETS, ETC. ARE TO BE PROTECTED FROM DEBRIS AND SEDIMENTATION DURING DEMOLITION. INSTALL FILTER FABRIC UNDER ANY INLET CASTINGS ON OR OFF SITE THAT RECEIVE STORM WATER FROM THE SITE BEFORE ANY DEMOLITION OR EARTHWORK ACTIVITIES COMMENCE.
10. VERIFY TREES TO BE REMOVED WITH THE LANDSCAPE ARCHITECT IN FIELD PRIOR TO FELLING.
11. IF ANY DISCREPANCIES OCCUR BETWEEN CONSTRUCTION DOCUMENTS AND SITE CONDITIONS DURING DEMOLITION CONTACT LANDSCAPE ARCHITECT IMMEDIATELY.

## SITE STAKING & LAYOUT NOTES:

1. DO NOT SCALE DRAWING FOR DETERMINING EXACT LAYOUT INFORMATION.
2. CONTRACTOR SHALL STAKE AND VERIFY ALL DIMENSIONS IN FIELD PRIOR TO INITIATION OF ANY CONSTRUCTION. REVIEW ANY DISCREPANCIES IMMEDIATELY WITH THE LANDSCAPE ARCHITECT FOR RESOLUTION.
3. LAYOUT COMPONENTS SHALL BE STAKED OUT IN THE FIELD BY THE CONTRACTOR. OBTAIN LANDSCAPE ARCHITECT APPROVAL BEFORE STARTING CONSTRUCTION.
4. DIMENSIONS IN CURBED AREAS SHALL BE TO FACE OF CURB. DIMENSIONS IN AREAS WITHOUT CURBING SHALL BE TO EDGE OF PAVEMENT. DIMENSIONS AT INTEGRAL CURB AND WALK SHALL BE TO FACE OF CURB. DIMENSIONS FROM BUILDING SHALL BE FROM FACE OF BUILDING.
5. DIMENSIONS ARE PARALLEL AND PERPENDICULAR TO BASE LINES, PROPERTY LINES OR BUILDING LINES UNLESS OTHERWISE NOTED.
6. RADII INDICATED SHALL BE FORMED AS CIRCULAR ARCS. CURVES AND ARCS SHALL INTERSECT OTHER CURVES AND LINES AT POINTS OF TANGENCY TO FORM SMOOTH TRANSITIONS UNLESS CLEARLY SHOWN OTHERWISE.
7. ACCESSIBLE RAMPS AND SIGNAGE SHALL BE IN ACCORDANCE WITH FEDERAL, STATE, COUNTY, CITY, AND LOCAL CODES WHICHEVER HAS JURISDICTION. SEE SITE PLANS FOR LOCATIONS AND SITE DETAILS FOR SPECIFICATIONS.
8. PARKING STRIPING ASSOCIATED WITH ACCESSIBLE PARKING STALLS AND LOADING ZONES ARE TO BE 4" WIDE PAINTED BLUE, UNLESS OTHERWISE NOTED. OTHER STRIPES ARE TO BE 4" WIDE PAINTED WHITE, UNLESS OTHERWISE NOTED.
9. REFER TO ARCHITECTURAL DRAWINGS FOR BUILDING DIMENSIONS.
10. REFER TO PLANTING PLANS FOR LAYOUT OF TREES, SHRUBS, PLANTING BEDS AND EXTENT OF ALL SODDING AND SEEDING.

## GENERAL NOTES:

1. BROWNING DAY MULLINS DIERDORF INC. CLAIMS NO RESPONSIBILITY FOR THE ACCURACY OF THE INFORMATION PROVIDED IN THE SURVEYS. IF ANY DISCREPANCIES ARE FOUND ON THE SURVEY PLAN OR FROM ACTUAL FIELD CONDITIONS THE CONTRACTOR SHALL CONTACT THE LANDSCAPE ARCHITECT IMMEDIATELY.
2. IT IS THE RESPONSIBILITY OF THE CONTRACTOR OR CONTRACTORS TO OBTAIN FEDERAL, STATE, COUNTY, CITY, AND LOCAL PERMITS FOR WORK REQUIRED UNLESS OTHERWISE NOTED. THE CONTRACTOR OR CONTRACTORS ARE RESPONSIBLE TO PAY FOR REQUIRED PERMITS BY AGENCIES MENTIONED ABOVE UNLESS OTHERWISE NOTED BY THE CONTRACT OR SPECIFICATIONS.
3. SEED OR SOD DAMAGE TO EXCAVATED AREAS AFTER FINAL GRADING UNLESS OTHERWISE NOTED. SEE PLANTING PLAN AND/OR EROSION CONTROL PLAN FOR DIRECTION AND VERIFICATION.
4. DAMAGE TO EXISTING IMPROVEMENTS, EXCAVATION AND /OR REMOVAL OF EXISTING IMPROVEMENTS SHALL BE RESTORED, RECONSTRUCTED, OR REPLACED DURING CONSTRUCTION BY THE CONTRACTOR AT HIS EXPENSE.
5. IT IS THE RESPONSIBILITY OF THE CONTRACTOR TO REMOVE MUD, DIRT, GRAVEL, AND ANY OTHER MATERIALS TRUCKED ONTO ANY PUBLIC OR PRIVATE STREETS OR SIDEWALKS ON OR OFF THE PROJECT SITE.
6. PROVIDE SMOOTH TRANSITION FROM NEW AREAS TO EXISTING FEATURES AS NECESSARY.
7. SUBMIT SAMPLES OF MATERIALS AND FINISHES TO THE LANDSCAPE ARCHITECT FOR APPROVAL PRIOR TO ORDERING AND INSTALLATION AS OUTLINED IN THE SPECIFICATIONS.

## UTILITY NOTES:

1. KNOWN UTILITY LOCATIONS ARE APPROXIMATE. THE CONTRACTOR SHALL BE RESPONSIBLE FOR DETERMINING THE EXACT LOCATION OF THE EXISTING UTILITIES AND REPAIRING ANY DAMAGE DONE TO THE UTILITIES DURING PROBING OR CONSTRUCTION. TO OBTAIN FIELD LOCATIONS OF EXISTING UNDERGROUND UTILITIES CALL INDIANA UNDERGROUND CABLE LOCATIONS 1.800.382.5544.
2. CONTRACTOR SHALL COORDINATE WITH UTILITY COMPANIES FOR THE RELOCATION OF UTILITIES ON SITE OR CROSSING THE SITE TO SERVICE ADJACENT PROPERTIES. DO NOT INTERRUPT EXISTING UTILITIES SERVING FACILITIES OCCUPIED AND USED BY OWNER OR OTHERS, DURING OCCUPIED HOURS, EXCEPT WHEN PERMITTED.
3. COSTS INCURRED IN COORDINATION OF NEW UTILITY SERVICES ARE THE RESPONSIBILITY OF THE GENERAL CONTRACTOR.
4. VERIFY CONNECTIONS TO EXISTING STORM, SANITARY, WATER, GAS, COMMUNICATION AND ELECTRIC UTILITIES WITH THE ENGINEER AND COORDINATED WITH RESPECTIVE UTILITY PRIOR TO BEGINNING WORK.
5. MAINTAIN 10' (HORIZONTAL) AND 18" (VERTICAL) SEPARATION BETWEEN WATER MAINS AND STORM/SANITARY SEWERS. THIS MEASUREMENT SHALL BE OUTSIDE OF PIPES. RECONSTRUCT, TO THEIR ORIGINAL CONDITION, OR AS REQUIRED OR DICTATED BY FEDERAL, STATE, COUNTY, CITY OR LOCAL AGENCIES, AREAS WHERE THE EXISTING PAVEMENT OR PAVEMENTS ARE DAMAGED DURING CONSTRUCTION FROM HEAVY TRAFFIC OR EQUIPMENT, FUEL OIL, OIL, GASOLINE, ETC., BY THE GENERAL CONTRACTOR, SUBCONTRACTOR, OR SUPPLIERS. THIS RECONSTRUCTION AND REPAIR SHALL TAKE PLACE AT THE END OF THE PROJECT CONSTRUCTION OR DURING THE SCHEDULED GRADING AND PAVING OF THOSE AREAS.

## TRAFFIC CONTROL NOTES:

1. SIGNS, STANDARDS, AND BARRICADES SHALL CONFORM TO INDOT STANDARD DETAILS SHEETS AND THE INDIANA MANUAL OF UNIFORM TRAFFIC CONTROL DEVICES.
2. IT IS THE RESPONSIBILITY OF THE CONTRACTOR TO COORDINATE PLANNED CONSTRUCTION ACTIVITIES WITH THE LOCAL MUNICIPALITY PRIOR TO CONSTRUCTION.
3. IF CONSTRUCTION ACTIVITIES ARE EXPECTED TO DISRUPT NORMAL OFF-SITE TRAFFIC FLOW, THE CONTRACTOR IS RESPONSIBLE FOR COORDINATING WITH THE LOCAL MUNICIPALITY AND PREPARE MAINTENANCE OF TRAFFIC PLANS AS REQUIRED.
4. NORMAL SITE TRAFFIC CIRCULATION TO BE MAINTAINED DURING CONSTRUCTION. ERECT BARRICADES AS NEEDED TO PROTECT CONSTRUCTION AREA FROM NORMAL TRAFFIC PATTERNS AROUND THE EXISTING FACILITIES.
5. IF EXISTING TRAFFIC CIRCULATION PATTERNS AROUND EXISTING FACILITIES MUST BE DISRUPTED OR BLOCKED, SUBMIT A TRAFFIC PLAN AND OBTAIN WRITTEN APPROVAL FROM LANDSCAPE ARCHITECT/ENGINEER BEFORE PROCEEDING.

## EROSION CONTROL NOTES:

1. CONTROL WASTE, GARBAGE, DEBRIS, WASTEWATER, AND OTHER SUBSTANCES ON THE SITE SO THEY WILL NOT BE TRANSPORTED FROM THE SITE BY THE ACTION OF WIND, STORM WATER RUN-OFF, OR OTHER FORCES. PROPER DISPOSAL OR MANAGEMENT OF ALL WASTE AND UNUSED BUILDING MATERIAL IS REQUIRED.
2. KEEP PUBLIC OR PRIVATE ROADWAYS CLEARED OF ACCUMULATED SEDIMENT. SEDIMENT THAT IS CLEARED MUST BE RETURNED TO THE LIKELY POINT OF ORIGIN OR OTHER SUITABLE LOCATION. CLEARING OF LARGE AMOUNTS OF SEDIMENT SHALL NOT INCLUDE FLUSHING WITH WATER.
3. EROSION CONTROL PRACTICES SHALL BE IN ACCORDANCE WITH THE INDIANA HANDBOOK FOR EROSION CONTROL IN DEVELOPING AREAS FROM THE DIVISION OF SOIL CONSERVATION, INDIANA DEPARTMENT OF NATURAL RESOURCES.
4. SEE EROSION CONTROL PLAN FOR MORE INFORMATION IF APPLICABLE (SEE CIVIL DRAWINGS)

## ABBREVIATIONS:

### Special Characters

| | |
|---|---|
| & | and |
| ∠ | angle |
| @ | at |
| ℄ | centerline |
| ° | degrees |
| Ø | diameter |
| ± | plus or minus (approximate) |
| ℗ | property line |

| Abbreviation | Description |
|---|---|
| A/C | air conditioning |
| AD | area drain |
| AFF | above finished floor |
| ALT | alternate |
| ALUM | aluminum |
| AP | access panel |
| ARCH | architect(ural) |
| ASSY | assembly |
| BC | bottom of curb |
| BD | board |
| BIO | bioswale, bioretention |
| BLDG | building |
| BLK | block(ing) |
| BM | beam or benchmark |
| BOT | bottom |
| BRK | brick |
| BRZ | bronze |
| BS | bottom of stairs |
| BSMT | basement |
| BW | bottom of wall |
| CF | cubic feet |
| CHW | chilled water |
| CI | cast iron |
| CIP | cast in place |
| CJ | control joint |
| CL | centerline |
| CMU | concrete masonry unit |
| CO | clean out |
| COL | column |
| CONC | concrete |
| CONST | construction |
| CONT | continuous |
| CORR | corrugated |
| CPT | carpet |
| CT | ceramic tile |
| CTSK | countersink |
| CW | curtain wall |
| CYS | cubic yards |
| DBL | double |
| DET | detail |
| DIA | diameter |
| DIAG | diagonal |
| DIM | dimension |
| DIV | division |
| DN | down |
| DS | downspout |
| DWG | drawing |
| E | east |
| EA | each |
| EF | each face |
| EJ | expansion joint |
| ELEC | electric(al) |
| ELEV | elevation, elevator |
| EMB | embedment |
| EQ | equal |
| EQUIP | equipment |
| EV | extruded vinyl |
| EW | each way |
| EX | exposed |
| EXH | exhaust |
| EXIST | existing |
| EXP | expansion |
| EXT | exterior |
| FDN | foundation |
| FG | finish grade |
| FIN | finish(ed) |
| FIX | fixture |
| FL | floor |
| FT | foot, feet |
| FTG | footing |
| GA | gauge |
| GALV | galvanized |
| GB | grab bar |
| GCT | glazed ceramic tile |
| GFRC | glass fiber reinforced concrete |
| GI | galvanized iron |
| GL | glass |
| GRD | ground |
| HB | hose bibb |
| HD | head |
| HDW | hardware |
| HGT | height |
| HMA | hot mix asphalt |
| HORIZ | horizontal |
| HP | high point |
| HPC | high performance coating |
| HR | hour |
| HSS | hollow structural steel |
| HVAC | heating/ventilation/ air conditioning |
| ID | inside diameter |
| IN | inch |
| INSUL | insulation |
| INT | interior |
| INV | invert |
| JST | joist |
| JT | joint |
| KIT | kitchen |
| LAB | laboratory |
| LF | lineal foot |
| LH | left hand |
| LHR | left hand reverse |
| LG | low point |
| LTG | lighting |
| LVR | louver |
| M | meter |
| MAINT | maintenance |
| MAS | masonry |
| MATL | material |
| MAX | maximum |
| MECH | mechanical |
| MEG | match existing grade |
| MFR | manufacturer |
| MIN | minimum |
| MISC | miscellaneous |
| MM | millimeter |
| MO | masonry opening |
| MTD | mounted |
| MTL | metal |
| MUL | mullion |
| N | north |
| NIC | not in contract |
| NO | number |
| NOM | nominal |
| NTS | not to scale |
| OC | on center |
| OD | outside diameter |
| OHD | opposite hand |
| OPNG | opening |
| OPP | opposite |
| ORD | overflow roof drain |
| OVHD | overhead |
| OVHG | overhang |
| P | paint |
| PA | planting area |
| PC | precast concrete |
| PERF | perforated |
| PL | plate |
| PLWD | plywood |
| POC | point of connection |
| PP | power pole |
| PR | pair |
| PRCST | precast |
| PREFAB | prefabricated |
| PSF | pounds per square foot |
| PSI | pounds per square inch |
| PTD | painted |
| PVMT | pavement |
| QT | quarry tile |
| R | riser |
| RAD | radius |
| RD | roof drain |
| REF | refer(ence) |
| REINF | reinforced |
| REQD | required |
| REV | revision |
| RG | rain garden |
| RH | right hand |
| RHR | right hand reversed |
| RO | rough opening |
| S | south |
| SCHED | schedule |
| SECT | section |
| SF | square feet |
| SHT | sheet |
| SIM | similar |
| SPEC | specification(s) |
| SQ | square |
| SQ FT | square feet |
| SQ IN | square inch |
| SS | stainless steel |
| STD | standard |
| STL | steel |
| STOR | storage |
| STRUCT | structural |
| SYS | square yards |
| T | tread |
| T&G | tongue and groove |
| TEL | telephone |
| TC | top of curb, top of casting |
| TD | top of drain |
| TI | top of inlet |
| TP | top of pavement |
| TS | top of stairs |
| TT | top of tread |
| TW | top of wall |
| TYP | typical |
| UNO | unless noted otherwise |
| VERT | vertical |
| VIF | verify in field |
| W | west |
| W/ | with |
| W/O | without |
| W/W | wall to wall |
| WD | wood |
| WPT | working point |
| WWF | welded wire fabric |
| YD | yard, yard drain |

## GRAPHIC SYMBOLS:

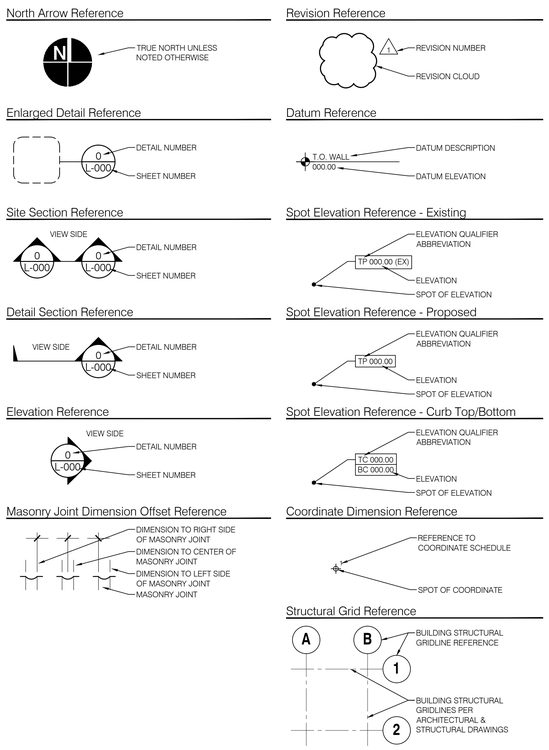


## MATERIAL GRAPHICS:

### Material Hatches

- EARTHWORK: COMPACTED BACKFILL/SUBGRADE
- EARTHWORK: COMPACTED COARSE AGGREGATE
- EARTHWORK: DRAINAGE FILL
- EARTHWORK: STRUCTURAL SOIL
- EARTHWORK: UNDISTURBED EARTH
- MASONRY: BRICK/STONE
- MASONRY: CMU
- MASONRY: GROUT/MORTAR
- METAL: STEEL
- PAVEMENT: ASPHALT, HEAVY-DUTY
- PAVEMENT: ASPHALT, STANDARD-DUTY
- PAVEMENT: CONCRETE, HEAVY-DUTY
- PAVEMENT: CONCRETE STANDARD-DUTY
- PAVEMENT: CRUSHED STONE
- PLANTING: PLANTING SOIL MIX
- PLANTING: LAWN/TURFGRASS SOD
- PLANTING: LAWN/TURFGRASS SEED
- WOOD: FINISH IN ELEVATION
- WOOD: FRAMING, BLOCKING

### Symbols

- BREAK LINE
- CENTER LINE
- CONSTRUCTION LIMITS LINE
- CONTOUR LINE - EXISTING
- CONTOUR LINE (PROPOSED) - 1' INTERVAL
- CONTOUR LINE (PROPOSED) - 5' INTERVAL
- 0.00° — DIMENSION LINE - ANGULAR
- 0'-0" — DIMENSION LINE - LINEAR
- R0'-0" — DIMENSION LINE - RADIAL
- EASMENT LINE
- C-02 — KEYNOTE REFERENCE LINE
- AREA A / AREA B — MATCH LINE
- NOTE/LABEL — NOTE/LABEL REFERENCE LINE
- PROPERTY LINE
- SUBDRAINAGE/DRAIN TILE


boora

Boora Architects Inc.
720 SW Washington Suite 800
Portland, OR 97205
T. 503.226.1575 F. 503.241.7429
www.boora.com

BROWNING DAY MULLINS DIERDORF LANDSCAPE ARCHITECTS

Browning Day Mullins Dierdorf, Inc.
Architecture
Landscape Architecture
Planning

626 North Illinois Street
Indianapolis, Indiana 46204
P: 317.635.5030
F: 317.634.5409
E: www.bdmd.com


JONATHAN D. HUTSAR REGISTERED No. LA20500154 STATE OF INDIANA LANDSCAPE ARCHITECT

Earlham College Science Complex
Phase 2

801 National Road West
Richmond, IN 47374-4095

| MARK | DATE | DESCRIPTION |
|---|---|---|

| | |
|---|---|
| Issued: | FEBRUARY 28, 2014 |
| Scale: | See Drawing |
| Drawn By: | BAS |
| Reviewed By: | JDH |
| File: | L-000_General Information.dwg |

Copyright

CONFORMED SET

ABBREVIATIONS, SYMBOLS & NOTES

L001

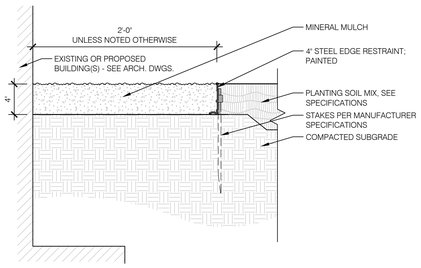


## 12 AGGREGATE MAINTENANCE STRIP

L002 1 1/2" = 1'-0"

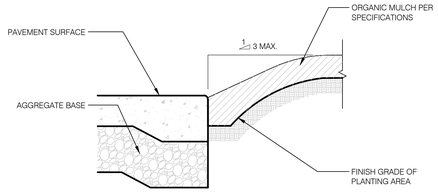


NOTES:
1. PAVEMENT EDGING SHALL BE INSTALLED AT ALL JUNCTIONS OF PAVEMENTS/CURBS AND PLANTING/MULCH AREAS FOR CONTAINMENT OF MULCH.
2. PAVEMENT EDGE SHALL CREATE A CLEAN SEPARATION BETWEEN PAVEMENT/CURBS.

## 8 PAVEMENT EDGE AT PLANTING

L002 1 1/2" = 1'-0"

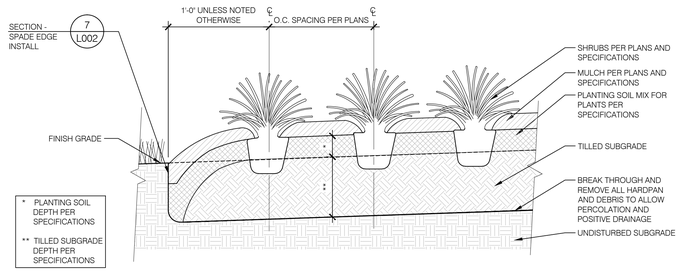


## 4 SECTION - MASS GROUNDCOVER / PERENNIAL PLANTING

L002 NTS

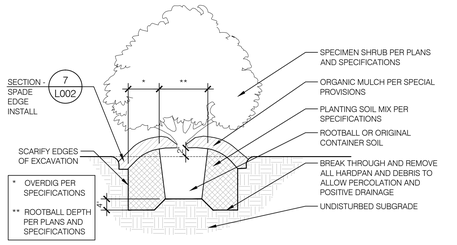


## 11 SPECIMEN SHRUB INSTALLATION

L002 NTS

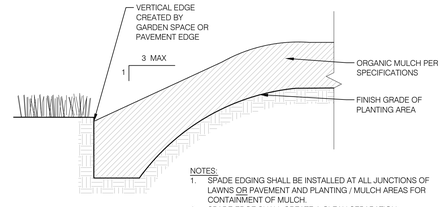


NOTES:
1. SPADE EDGING SHALL BE INSTALLED AT ALL JUNCTIONS OF LAWNS OR PAVEMENT AND PLANTING / MULCH AREAS FOR CONTAINMENT OF MULCH.
2. SPADE EDGE SHALL CREATE A CLEAN SEPARATION BETWEEN LAWN OR PAVEMENT AND PLANTING AREAS AND SHALL FORM SMOOTH AND EVEN LINES AS INDICATED ON THE PLANS.

## 7 Section - Spade Edge Installation

L002 NTS

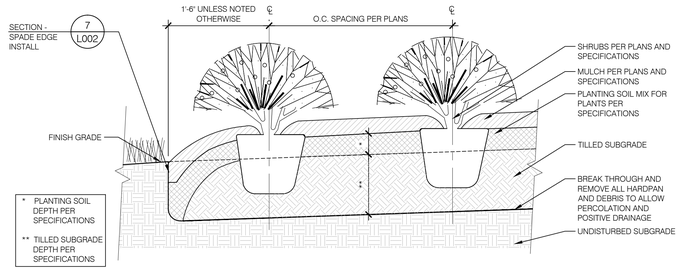


## 3 SECTION - MASS SHRUB PLANTING

L002 NTS

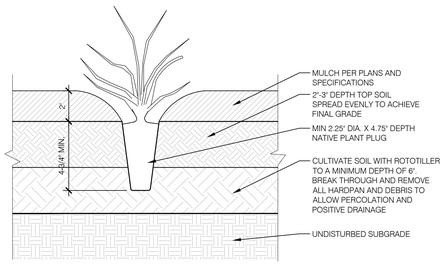


## 10 Section - Native Plug Installation

L002 NTS

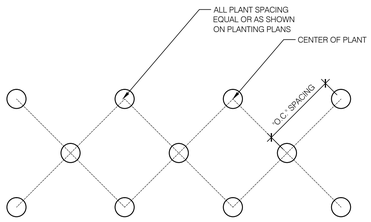


## 6 Plant Spacing

L002 NTS

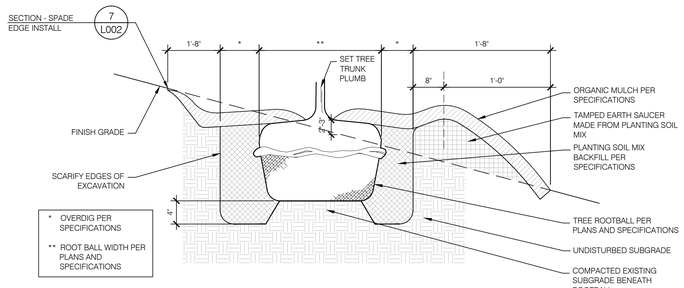


## 2 SECTION - TREE PLANTING PIT (SLOPED GRADE)

L002 NTS

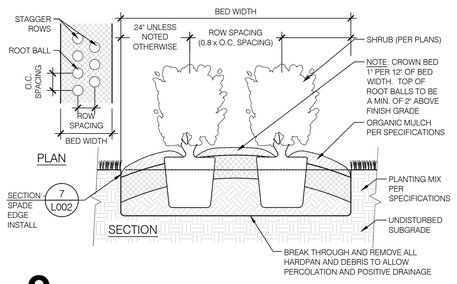


## 9 SECTION - HEDGE INSTALL (DOUBLE

L002 NTS

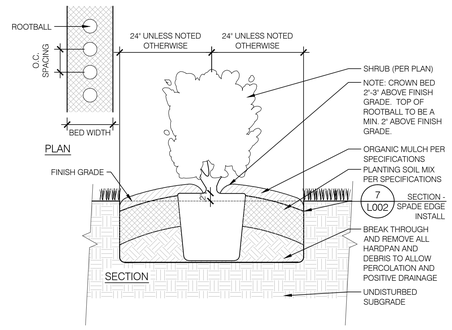


## 5 SECTION - HEDGE INSTALL (SINGLE)

L002 NTS

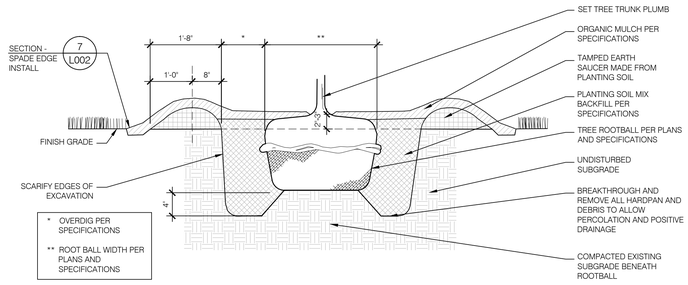


## 1 SECTION - TREE PLANTING PIT (LEVEL GRADE)

L002 NTS


boora

**Boora Architects Inc.**
**720 SW Washington Suite 800**
**Portland, OR 97205**
**T. 503.226.1575 F. 503.241.7429**
**www.boora.com**

BROWNING DAY MULLINS DIERDORF LANDSCAPE ARCHITECTS

Browning Day Mullins Dierdorf, Inc.
Architecture
Landscape Architecture
Planning

626 North Illinois Street
Indianapolis, Indiana 46204
P: 317.635.5030
F: 317.634.5409
E: www.bdmd.com


JONATHAN D. HUTSAR REGISTERED No. LA20500154 STATE OF INDIANA LANDSCAPE ARCHITECT

Earlham College Science Complex
Phase 2

801 National Road West
Richmond, IN 47374-4095

| MARK | DATE | DESCRIPTION |
|---|---|---|

| | |
|---|---|
| Issued: | FEBRUARY 28, 2014 |
| Scale: | See Drawing |
| Drawn By: | BAS |
| Reviewed By: | JDH |
| File: | L-000_General Information.dwg |

Copyright

CONFORMED SET

GENERAL PLANTING DETAILS

L002

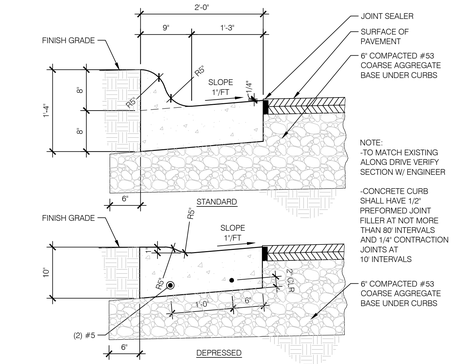


## 7 EARLHAM STANDARD COMBINED CURB & GUTTER

L003 1" = 1'-0"

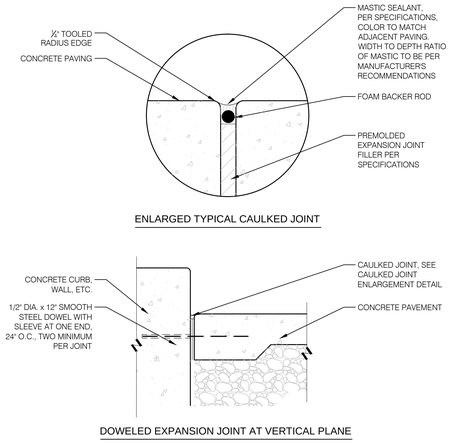


## 6 CONCRETE PAVING JOINT DETAILS

L003 1 1/2" = 1'-0"

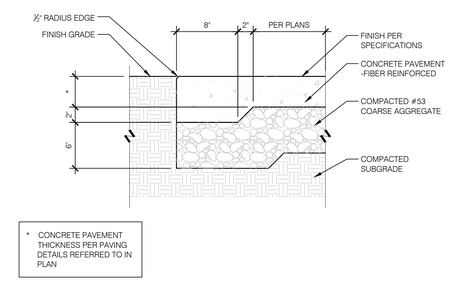


## 5 CONCRETE PVMT. THICKENED EDGE

L003 1 1/2" = 1'-0"

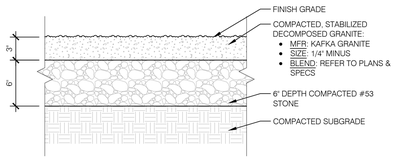


## 8 DECOMPOSED GRANITE

L003 1 1/2" = 1'-0"

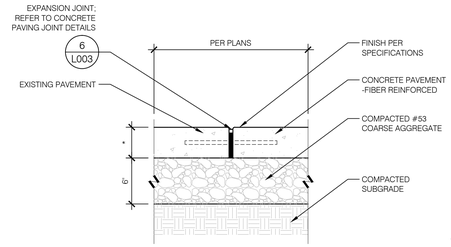


## 4 CONCRETE PAVING @ NEW/OLD

L003 1 1/2" = 1'-0"

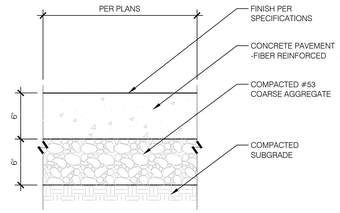


## 3 6" CONCRETE PAVING

L003 1 1/2" = 1'-0"

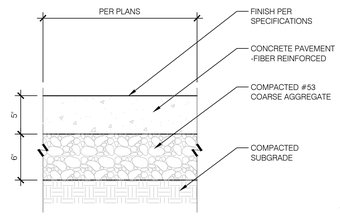


## 2 5" CONCRETE PAVING

L003 1 1/2" = 1'-0"

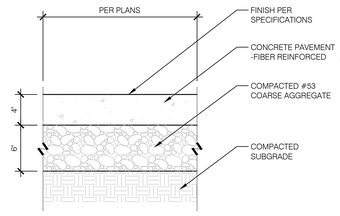


## 1 4" CONCRETE PAVING

L003 1 1/2" = 1'-0"


boora

**Boora Architects Inc.**
**720 SW Washington Suite 800**
**Portland, OR 97205**
**T. 503.226.1575 F. 503.241.7429**
**www.boora.com**

BROWNING DAY MULLINS DIERDORF LANDSCAPE ARCHITECTS

Browning Day Mullins Dierdorf, Inc.
Architecture
Landscape Architecture
Planning

626 North Illinois Street
Indianapolis, Indiana 46204
P: 317.635.5030
F: 317.634.5409
E: www.bdmd.com


JONATHAN D. HUTSAR REGISTERED No. LA20500154 STATE OF INDIANA LANDSCAPE ARCHITECT

Earlham College Science Complex
Phase 2

801 National Road West
Richmond, IN 47374-4095

| MARK | DATE | DESCRIPTION |
|---|---|---|

| | |
|---|---|
| Issued: | FEBRUARY 28, 2014 |
| Scale: | See Drawing |
| Drawn By: | BAS |
| Reviewed By: | JDH |
| File: | L-000_General Information.dwg |

Copyright

CONFORMED SET

GENERAL PAVING DETAILS

L003

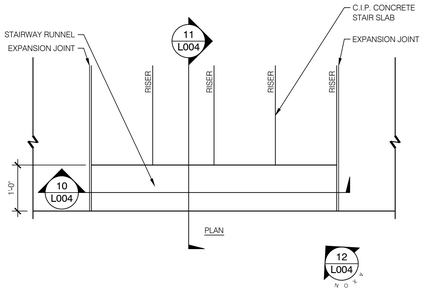


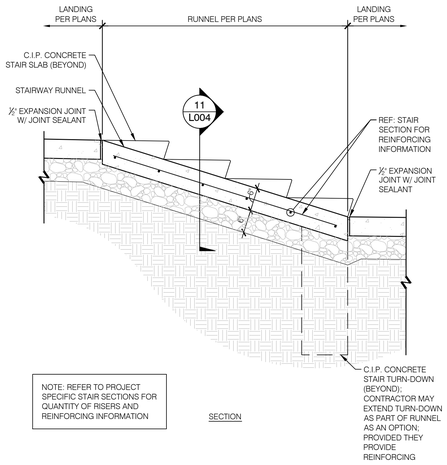


## 10 PLAN/SECTION - STAIRWAY RUNNEL
L004 3/4" = 1'-0"

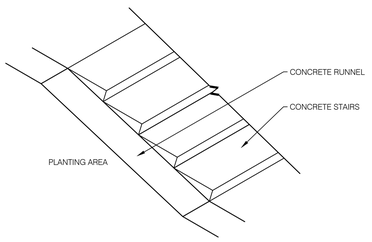


## 12 AXON - STAIRWAY RUNNEL
L004 1/2" = 1'-0"

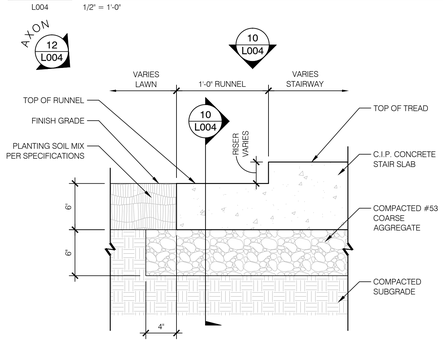


## 11 SECTION - STAIRWAY RUNNEL
L004 1 1/2" = 1'-0"

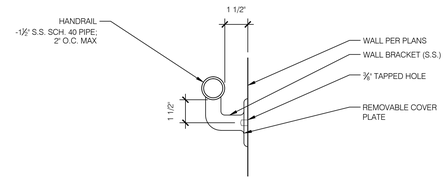


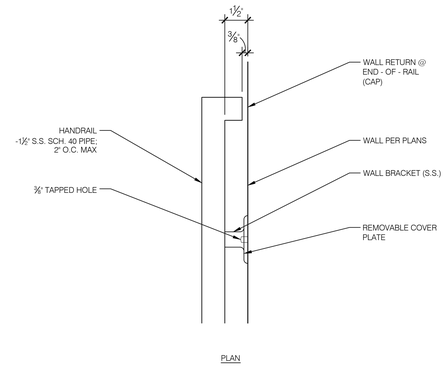


## 9 TYP. WALL-MOUNTED RAILING
L004 3" = 1'-0"

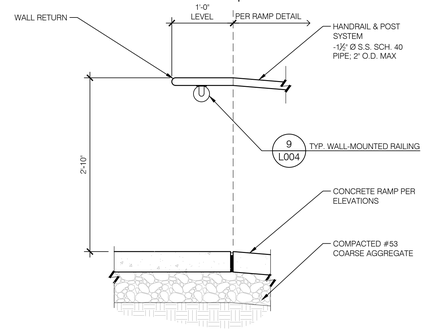


## 8 TYP. RAILING AT TOP OF RAMP (WALL - MOUNTED)
L004 1" = 1'-0"

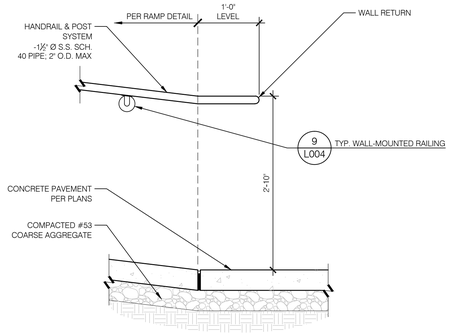


## 7 TYP. RAILING AT BOTTOM OF RAMP (WALL - MOUNTED)
L004 1" = 1'-0"

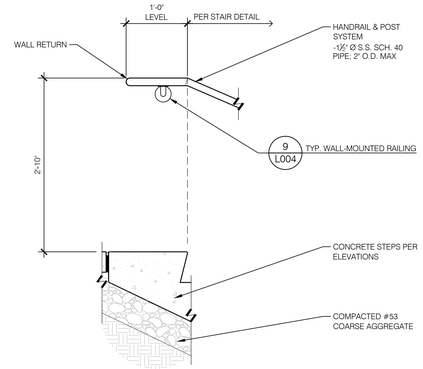


## 6 TYP. RAILING AT TOP OF STAIRS (WALL - MOUNTED)
L004 1" = 1'-0"

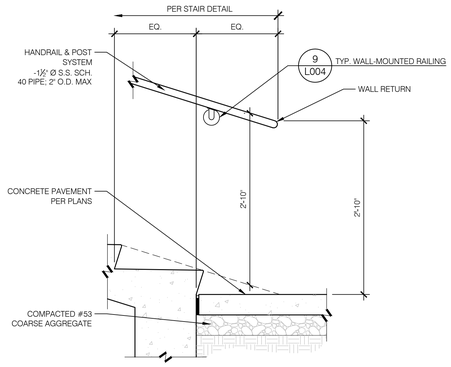


## 5 TYP. RAILING AT BOTTOM OF STAIRS (WALL - MOUNTED)
L004 1" = 1'-0"

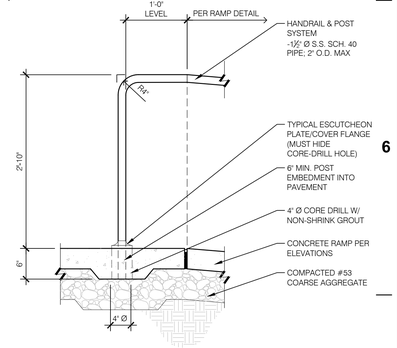


## 4 TYP. RAILING AT TOP OF RAMP (SLAB - MOUNTED)
L004 1" = 1'-0"

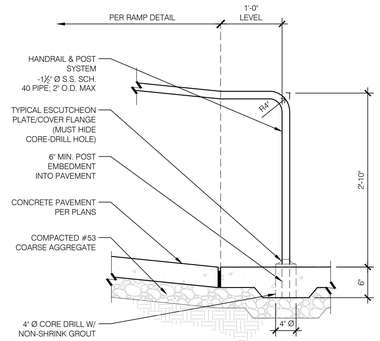


## 3 TYP. RAILING AT BOTTOM OF RAMP (SLAB - MOUNTED)
L004 1" = 1'-0"

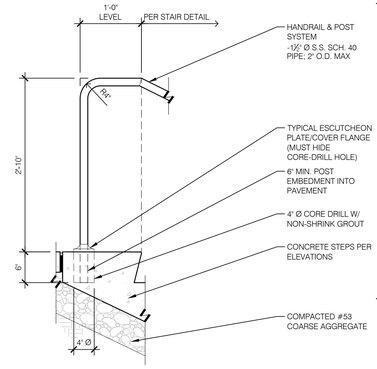


## 2 TYP. RAILING AT TOP OF STAIRS (SLAB - MOUNTED)
L004 1" = 1'-0"

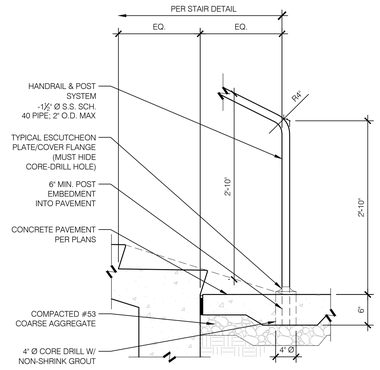


## 1 TYP. RAILING AT BOTTOM OF STAIRS (SLAB - MOUNTED)
L004 1" = 1'-0"


boora

Boora Architects Inc.
720 SW Washington Suite 800
Portland, OR 97205
T. 503.226.1575 F. 503.241.7429
www.boora.com

BROWNING DAY MULLINS DIERDORF LANDSCAPE ARCHITECTS

Browning Day Mullins Dierdorf, Inc.
Architecture
Landscape Architecture
Planning

626 North Illinois Street
Indianapolis, Indiana 46204
P: 317.635.5030
F: 317.634.5409
E: www.bdmd.com


JONATHAN D. HUTSAR REGISTERED No. LA20500154 STATE OF INDIANA LANDSCAPE ARCHITECT

Earlham College Science Complex
Phase 2
801 National Road West
Richmond, IN 47374-4095

| MARK | DATE | DESCRIPTION |
|---|---|---|

| | |
|---|---|
| Issued: | FEBRUARY 28, 2014 |
| Scale: | See Drawing |
| Drawn By: | BAS |
| Reviewed By: | JDH |
| File: | L-000_General Information.dwg |

Copyright

CONFORMED SET

GENERAL STAIR/RAILING DETAILS

L004

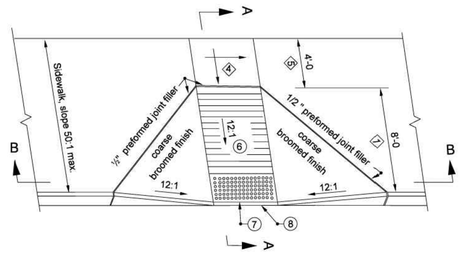


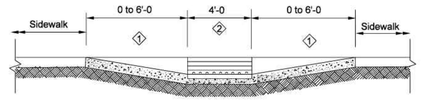


SECTION B-B

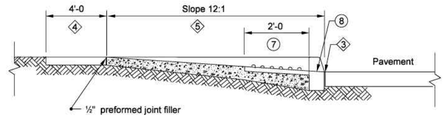


SECTION A-A

NOTES:

6. SEE 1/L500 FOR GROOVE DETAILS
7. SEE 1/L500 FOR DETAILS ON THE DETECTABLE WARNING
8. SEE 1/L500 FOR ALTERNATE CURB CONSTRUCTION
10. SEE STANDARD DRAWING E 604-SWCR-01 AND -02 FOR LOCTION PLAN AND GENRAL NOTES RESPECTIVELY.
11. SEE STANDARD DRAWING E 604-SWCR-02 FOR TYPICAL RAMP CONSTRUCTION DETAIL

INDIANA DEPARTMENT OF TRANSPORTATION
SIDEWALK CURB RAMP
TYPE A
SEPTEMBER 2005
STANDARD DRAWING NO. E 604-SWCR-03

RICHARD L. VANCLEAVE REGISTERED No. 9750 STATE OF INDIANA PROFESSIONAL ENGINEER
/s/ Richard L. VanCleave 9-01-05 DESIGN STANDARDS ENGINEER DATE
/s/ Richard K. Smutzer 9-01-05 CHIEF HIGHWAY ENGINEER DATE
DESIGN STANDARDS ENGINEER

## 2 SIDEWALK CURB RAMP - TYPE A

L005 1/4" = 1'-0"

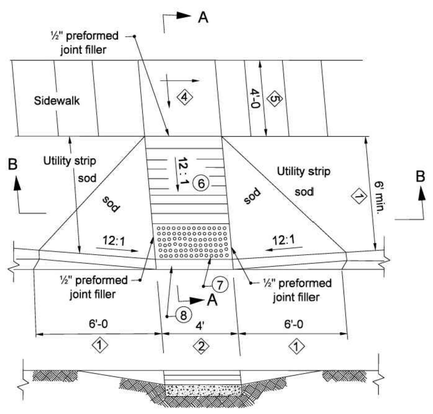


SECTION B-B

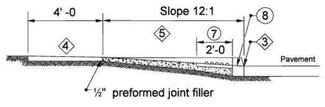


SECTION A-A

NOTES:

6. SEE 1/L500 FOR GROOVE DETAILS
7. SEE 1/L500 FOR DETAILS ON THE DETECTABLE WARNING
8. SEE 1/L500 FOR ALTERNATE CURB CONSTRUCTION
10. SEE STANDARD DRAWING E 604-SWCR-01 AND -02 FOR LOCTION PLAN AND GENRAL NOTES RESPECTIVELY.
11. SEE STANDARD DRAWING E 604-SWCR-02 FOR TYPICAL RAMP CONSTRUCTION DETAIL

INDIANA DEPARTMENT OF TRANSPORTATION
SIDEWALK CURB RAMPS
TYPE C
SEPTEMBER 2005
STANDARD DRAWING NO. E 604-SWCR-05

RICHARD L. VANCLEAVE REGISTERED No. 9750 STATE OF INDIANA PROFESSIONAL ENGINEER
/s/ Richard L. VanCleave 9-01-05 DESIGN STANDARDS ENGINEER DATE
/s/ Richard K. Smutzer 9-01-05 CHIEF HIGHWAY ENGINEER DATE
DESIGN STANDARDS ENGINEER

## 3 SIDEWALK CURB RAMP - TYPE C

L005 1/4" = 1'-0"

GENERAL NOTES :

1. These dimensions are based on a 6 in. curb height. They shall be proportionally adjusted for other curb heights.
2. Where site infeasibility precludes construction to the width shown, such width may be decreased to a minimum of 3'-0.
3. The bottom edge of the curb ramp shall be flush with the edge of adjacent pavement and gutter line.
4. Landing areas at the top of curb ramps shall have maximum cross slope of 50 : 1 in any direction. When site infeasibility precludes a landing slope of 50 : 1 in any direction, the slope perpendicular to the curb face shall not exceed 50 :1.
5. If site infeasibility precludes construction to the width shown, the landing width may be decreased to 3'-0 minimum. The running slope of the curb ramp may be steepened to a maximum of 10 : 1 for a maximum 6 in. rise.
6. Drainage inlets should be located uphill from curb ramps to prevent puddles at the path of travel.
7. See Standard Drawing E 604-SWCR-12 for improved access on narrow sidewalks.
8. Algebraic difference in grade between the base of curb ramp and the gutter shall be limited to less than 11%. If it is not practical, a 2'-0 wide level strip shall be provided. See detail sketch.
9. Minimum recommended width of curb ramp is 4'-0.

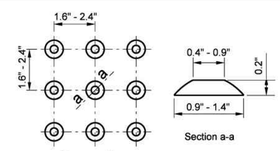


TRUNCATED DOMES USED IN DETECTABLE WARNINGS

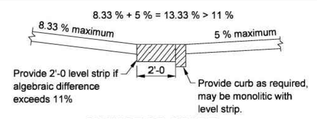


CHANGE OF GRADE

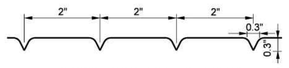


DETAIL OF RAMP GROOVES

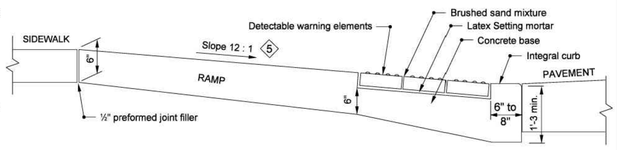


RAMP AND BRICK SURFACE CONSTRUCTION DETAIL

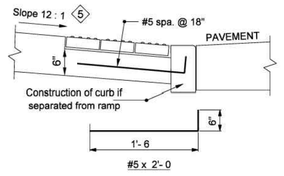


ALTERNATE CURB CONSTRUCTION

INDIANA DEPARTMENT OF TRANSPORTATION
SIDEWALK CURB RAMPS
GENERAL NOTES & DETAILS
SEPTEMBER 2005
STANDARD DRAWING NO. E 604-SWCR-02

RICHARD L. VANCLEAVE REGISTERED No. 9750 STATE OF INDIANA PROFESSIONAL ENGINEER
/s/ Richard L. VanCleave 9-01-05 DESIGN STANDARDS ENGINEER DATE
/s/ Richard K. Smutzer 9-01-05 CHIEF HIGHWAY ENGINEER DATE
DESIGN STANDARDS ENGINEER

NOTE: REFER TO SPEC. SECTION 32 14 00 - UNIT PAVING FOR DETECTABLE WARNING PAVERS

## 1 SIDEWALK CURB RAMP GENERAL NOTES & DETAILS

L005 1/4" = 1'-0"


boora

Boora Architects Inc.
720 SW Washington Suite 800
Portland, OR 97205
T. 503.226.1575 F. 503.241.7429
www.boora.com

BROWNING DAY MULLINS DIERDORF LANDSCAPE ARCHITECTS

Browning Day Mullins Dierdorf, Inc.
Architecture
Landscape Architecture
Planning

626 North Illinois Street
Indianapolis, Indiana 46204
P: 317.635.5030
F: 317.634.5409
E: www.bdmd.com


JONATHAN D. HUTSAR REGISTERED No. LA20500154 STATE OF INDIANA LANDSCAPE ARCHITECT

Earlham College Science Complex
Phase 2
801 National Road West
Richmond, IN 47374-4095

| MARK | DATE | DESCRIPTION |
|---|---|---|

| | |
|---|---|
| Issued: | FEBRUARY 28, 2014 |
| Scale: | See Drawing |
| Drawn By: | BAS |
| Reviewed By: | JDH |
| File: | L-000_General Information.dwg |

Copyright

CONFORMED SET

CURB RAMP DETAILS

L005

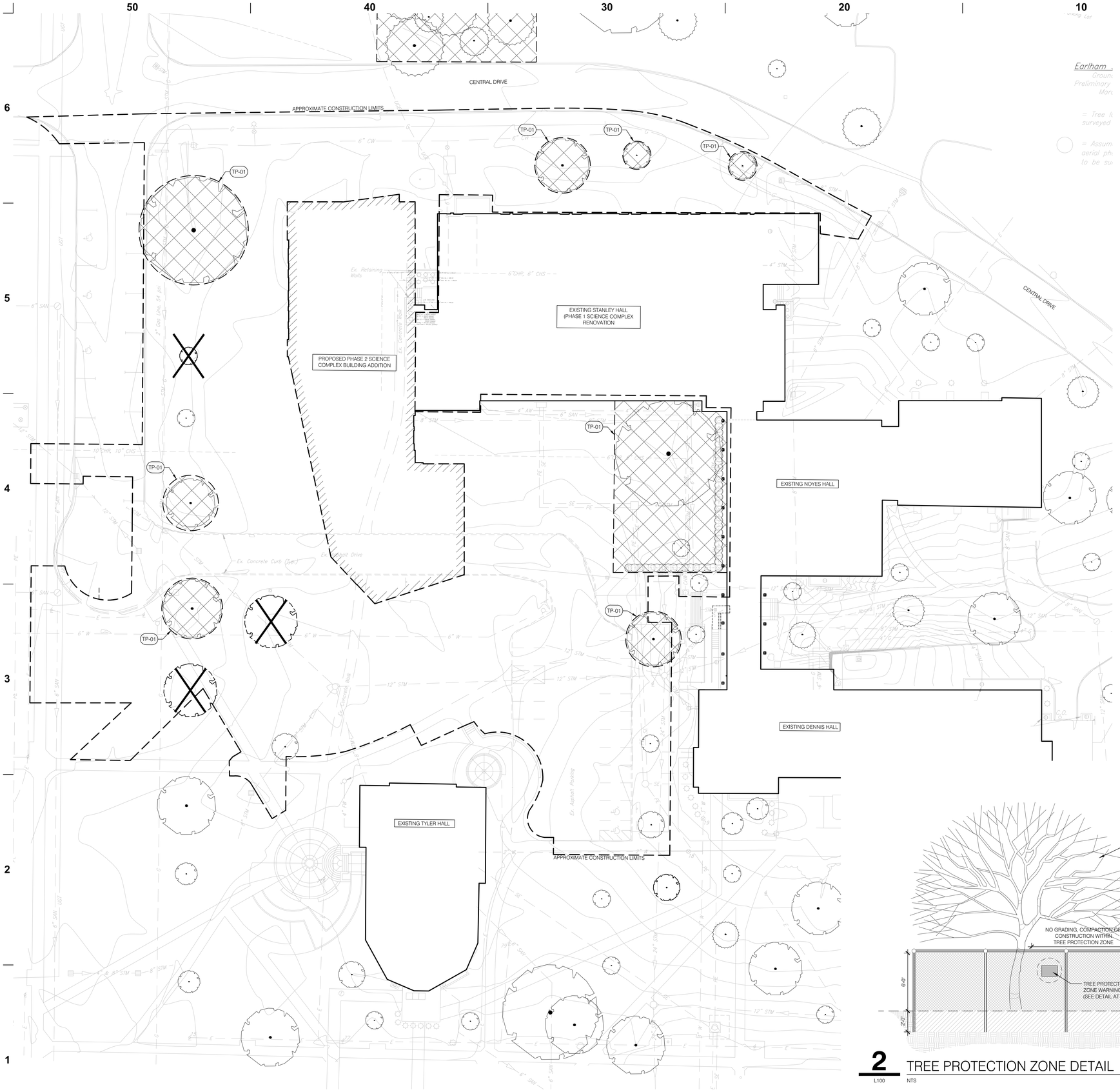


## TREE PRESERVATION & DEMOLITION PLAN GENERAL NOTES

1. DO NOT SCALE DRAWINGS.
2. COORDINATE ALL WORK WITH OTHER DESIGN DISCIPLINES. SEE CIVIL FOR DEMOLITION OF PAVING AND WALKS
3. COORDINATE ALL WORK WITH SPECIFICATIONS.
4. PRESERVE AND PROTECT ALL EXISTING SITE IMPROVEMENTS INDICATED TO REMAIN FROM DAMAGE DURING CONSTRUCTION.

## TREE DEMOLITION AND TREE PROTECTION PLAN LEGEND

REMOVE EXISTING TREE, INCLUDING STUMP AND ANY OTHER DEBRIS, AND REMOVE EXISTING SHRUBS AS INDICATED

EXISTING TREE TO REMAIN - NO PROTECTION MEASURES NECESSARY; USE CAUTION WHEN WORKING NEAR OR AROUND ALL TREES

TREE TO BE PRESERVED & PROTECTED DURING CONSTRUCTION.

- PROTECTION METHODS INCLUDE:
  - PROTECTION ZONE FENCING & SIGNAGE
- PRESERVATION METHODS INCLUDE:
  - ROOT PRUNING (BY OWNER)
  - AIR SPADE EXCAVATION
  - WATERING
  - ARBORIST MONITORING & RECOMMENDATIONS

## TREE PRESERVATION & DEMOLITION PLAN KEYNOTES

| SYMBOL | DESCRIPTION | DETAIL |
|---|---|---|
| TP-01 | TREE PROTECTION ZONE - FENCING TO BE INSTALLED TO OUTSIDE OF DRIP LINE, BACK OF EXISTING CURB OR EDGE OF PAVEMENT WHERE APPLICABLE; FENCING IS NOT TO BE RELOCATED OR REMOVED WITHOUT WRITTEN PERMISSION FROM OWNER AND ARCHITECT. IT IS NOT TO BE ENTERED WITH THE EXCEPTION OF THE MINIMAL AMOUNT OF SITE WORK REQUIRED IN THAT AREA. | 2/L100 |

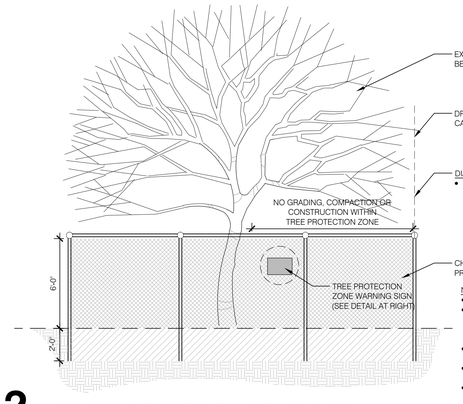


WARNING
TREE PROTECTION ZONE

THIS FENCE SHALL NOT BE REMOVED OR RELOCATED WITHOUT APPROVAL FROM OWNER

NOTES:
- MINIMUM SIZE OF 8.5 x 11
- SECURELY FASTENED TO FENCE
- SIGN TO BE MADE OF WEATHERPROOF MATERIAL
- INSTALL ONE SIGN SPACED APPROX. EVERY 50 FEET ON PROTECTION-ZONE FENCING, BUT NO FEWER THAN FOUR SIGNS WITH EACH FACING A DIFFERENT DIRECTION

NOTE:
FENCING IS NOT TO BE RELOCATED OR REMOVED WITHOUT PRIOR WRITTEN PERMISSION FROM ARBORIST, OWNER AND LANDSCAPE ARCHITECT

NOTES:
- TREE WILL REQUIRE SUPPLEMENTAL WATERING
- IF THE FENCE IS INSIDE THE DRIPLINE, PLYWOOD BOARDS OR STEEL PLATES OR HEAVY DUTY GROUND PROTECTION MATS OVER AN 8" MULCH LAYER WILL BE REQUIRED TO PROTECT THE TREE ROOTS AND GROUND FROM DAMAGE, SOIL COMPACTION AND EROSION FROM CONSTRUCTION EQUIPMENT AND VEHICLES
- 2" GALVANIZED IRON POSTS, DRIVEN INTO THE GROUND TO A MIN. 2'-0" DEPTH, AT NO MORE THAN 10' SPACING.
- GENERAL CONTRACTOR SHALL CONTACT LANDSCAPE ARCHITECT TO SCHEDULE ON SITE MEETING TO REVIEW INSTALLATION AND LAYOUT OF TREE PROTECTION FENCING.
- REFER TO SPECIFICATION SECTION 015639 FOR ANY CLARIFICATION OR ADDITIONAL INFORMATION.

**2** L100 TREE PROTECTION ZONE DETAIL
NTS

**1** L100 Earlham College Science Complex - Phase 2
Tree Preservation & Demolition Plan
1"=20'-0"

0' 10' 20' 40'


boora

Boora Architects Inc.
720 SW Washington Suite 800
Portland, OR 97205
T. 503.226.1575 F. 503.241.7429
www.boora.com

BROWNING DAY MULLINS DIERDORF LANDSCAPE ARCHITECTS

Browning Day Mullins Dierdorf, Inc.
Architecture
Landscape Architecture
Planning

626 North Illinois Street
Indianapolis, Indiana 46204
P: 317.635.5030
F: 317.634.5409
E: www.bdmd.com


JONATHAN D. HUTSAR REGISTERED No. LA20500154 STATE OF INDIANA LANDSCAPE ARCHITECT

Earlham College Science Complex
Phase 2
801 National Road West
Richmond, IN 47374-4095

| MARK | DATE | DESCRIPTION |
|---|---|---|
| 1 | 01.15.2014 | ADDENDUM 2 |

| | |
|---|---|
| Issued: | FEBRUARY 28, 2014 |
| Scale: | 1" = 20'-0" |
| Drawn By: | BAS |
| Reviewed By: | JDH |
| File: | L-100_Overall Plans.dwg |

Copyright

CONFORMED SET

TREE PRESERVATION & DEMOLITION PLAN

L100

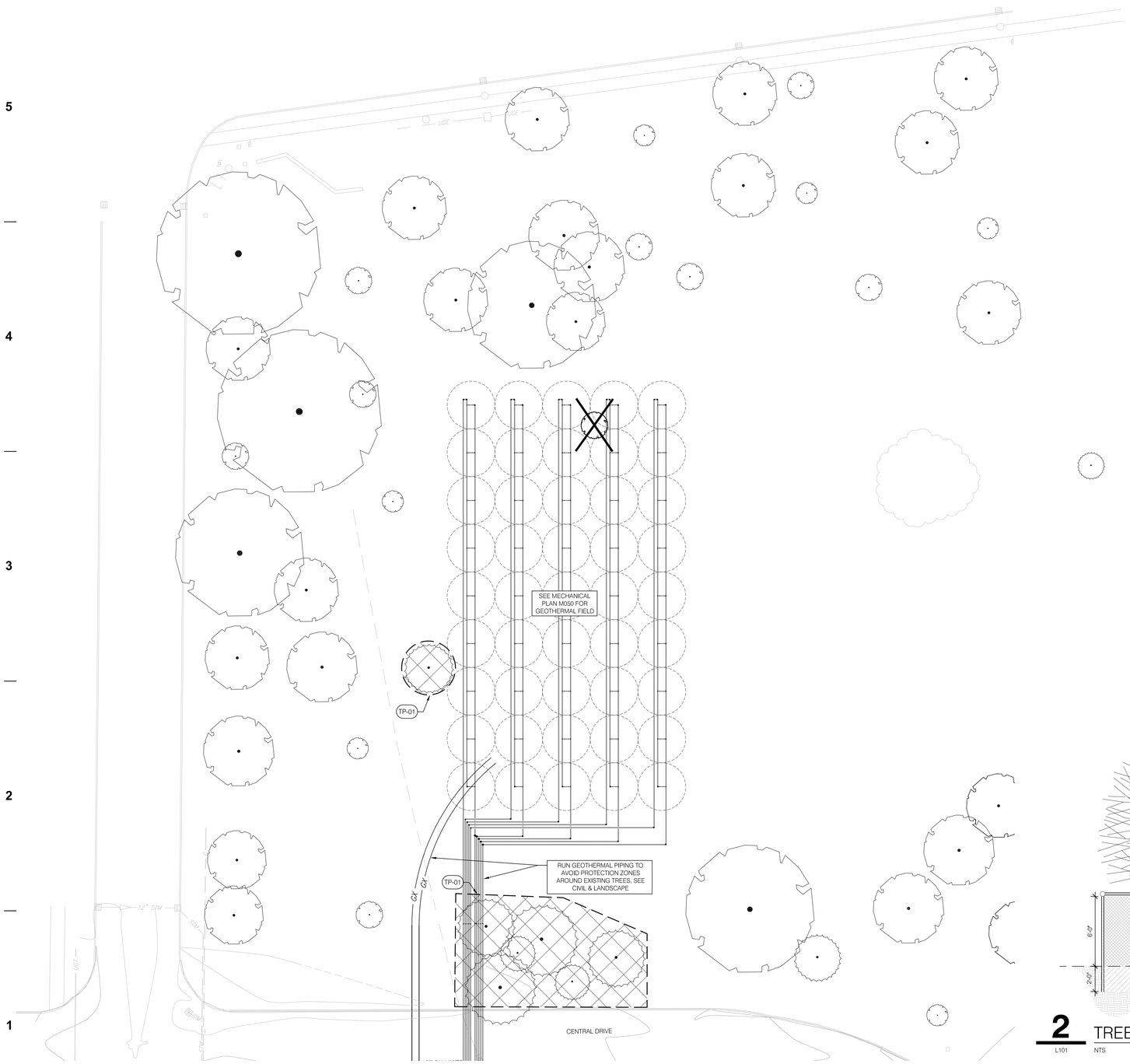


1
L101
Earlham College Science Complex - Phase 2
Tree Preservation & Demolition Plan
1"=20'-0"

## TREE PRESERVATION & DEMOLITION PLAN GENERAL NOTES

1. DO NOT SCALE DRAWINGS.
2. COORDINATE ALL WORK WITH OTHER DESIGN DISCIPLINES. SEE CIVIL FOR DEMOLITION OF PAVING AND WALKS
3. COORDINATE ALL WORK WITH SPECIFICATIONS.
4. PRESERVE AND PROTECT ALL EXISTING SITE IMPROVEMENTS INDICATED TO REMAIN FROM DAMAGE DURING CONSTRUCTION.

## TREE DEMOLITION AND TREE PROTECTION PLAN LEGEND

REMOVE EXISTING TREE, INCLUDING STUMP AND ANY OTHER DEBRIS, AND REMOVE EXISTING SHRUBS AS INDICATED

EXISTING TREE TO REMAIN - NO PROTECTION MEASURES NECESSARY; USE CAUTION WHEN WORKING NEAR OR AROUND ALL TREES

TREE TO BE PRESERVED & PROTECTED DURING CONSTRUCTION.

- PROTECTION METHODS INCLUDE:
  - PROTECTION ZONE FENCING & SIGNAGE
- PRESERVATION METHODS INCLUDE:
  - ROOT PRUNING (BY OWNER)
  - AIR SPADE EXCAVATION
  - WATERING
  - ARBORIST MONITORING & RECOMMENDATIONS

## TREE PRESERVATION & DEMOLITION PLAN KEYNOTES

| SYMBOL | DESCRIPTION | DETAIL |
|---|---|---|
| TP-01 | TREE PROTECTION ZONE - FENCING TO BE INSTALLED TO OUTSIDE OF DRIP LINE, BACK OF EXISTING CURB OR EDGE OF PAVEMENT WHERE APPLICABLE; FENCING IS NOT TO BE RELOCATED OR REMOVED WITHOUT WRITTEN PERMISSION FROM OWNER AND ARCHITECT. IT IS NOT TO BE ENTERED WITH THE EXCEPTION OF THE MINIMAL AMOUNT OF SITE WORK REQUIRED IN THAT AREA. | 2/L101 |

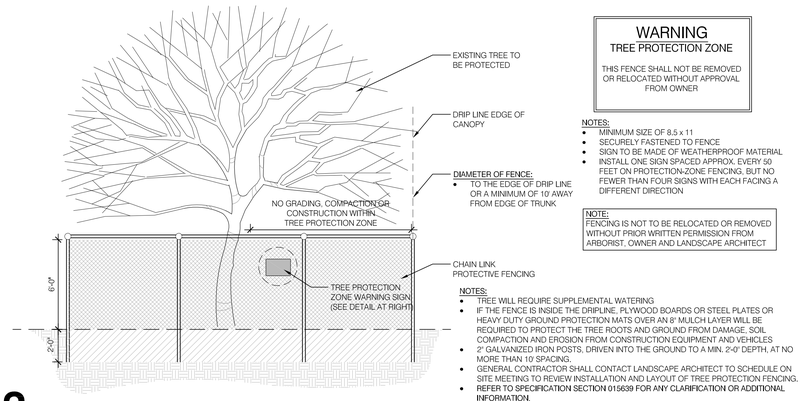


WARNING
TREE PROTECTION ZONE

THIS FENCE SHALL NOT BE REMOVED OR RELOCATED WITHOUT APPROVAL FROM OWNER

NOTES:
- MINIMUM SIZE OF 8.5 x 11
- SECURELY FASTENED TO FENCE
- SIGN TO BE MADE OF WEATHERPROOF MATERIAL
- INSTALL ONE SIGN SPACED APPROX. EVERY 50 FEET ON PROTECTION-ZONE FENCING, BUT NO FEWER THAN FOUR SIGNS WITH EACH FACING A DIFFERENT DIRECTION

NOTE:
FENCING IS NOT TO BE RELOCATED OR REMOVED WITHOUT PRIOR WRITTEN PERMISSION FROM ARBORIST, OWNER AND LANDSCAPE ARCHITECT

NOTES:
- TREE WILL REQUIRE SUPPLEMENTAL WATERING
- IF THE FENCE IS INSIDE THE DRIPLINE, PLYWOOD BOARDS OR STEEL PLATES OR HEAVY DUTY GROUND PROTECTION MATS OVER AN 8" MULCH LAYER WILL BE REQUIRED TO PROTECT THE TREE ROOTS AND GROUND FROM DAMAGE, SOIL COMPACTION AND EROSION FROM CONSTRUCTION EQUIPMENT AND VEHICLES
- 2" GALVANIZED IRON POSTS, DRIVEN INTO THE GROUND TO A MIN. 2'-0" DEPTH, AT NO MORE THAN 10' SPACING.
- GENERAL CONTRACTOR SHALL CONTACT LANDSCAPE ARCHITECT TO SCHEDULE ON SITE MEETING TO REVIEW INSTALLATION AND LAYOUT OF TREE PROTECTION FENCING.
- REFER TO SPECIFICATION SECTION 015639 FOR ANY CLARIFICATION OR ADDITIONAL INFORMATION.

2
L101
TREE PROTECTION ZONE DETAIL
NTS

0' 10' 20' 40'

boora
Boora Architects Inc.
720 SW Washington Suite 800
Portland, OR 97205
T. 503.226.1575 F. 503.241.7429
www.boora.com

BROWNING DAY MULLINS DIERDORF LANDSCAPE ARCHITECTS
Browning Day Mullins Dierdorf, Inc.
Architecture
Landscape Architecture
Planning
626 North Illinois Street
Indianapolis, Indiana 46204
P: 317.635.5030
F: 317.634.5409
E: www.bdmd.com

JONATHAN D. HUTSLAR REGISTERED No. LA20500154 STATE OF INDIANA LANDSCAPE ARCHITECT

Earlham College Science Complex
Phase 2
801 National Road West
Richmond, IN 47374-4095

| MARK | DATE | DESCRIPTION |
|---|---|---|

| | |
|---|---|
| Issued: | JANUARY 29, 2014 |
| Scale: | 1" = 20'-0" |
| Drawn By: | BAS |
| Reviewed By: | JDH |
| File: | L-100_Overall Plans.dwg |

Copyright

CONFORMED SET

TREE PRESERVATION & DEMOLITION PLAN

L101

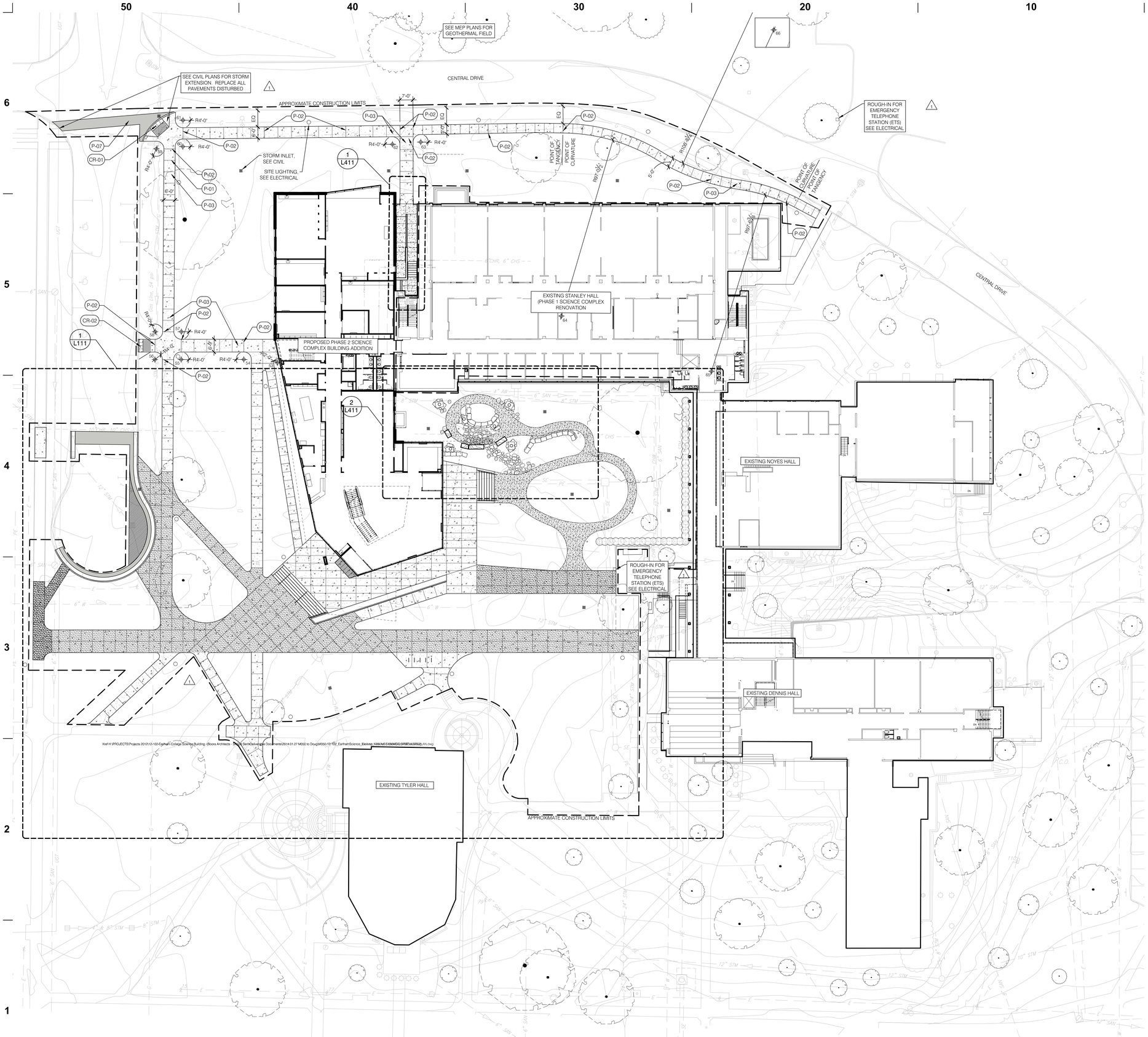


## SITE PLAN GENERAL NOTES

1. DO NOT SCALE DRAWINGS.
2. COORDINATE ALL WORK WITH OTHER DESIGN DISCIPLINES.
3. COORDINATE ALL WORK WITH SPECIFICATIONS.
4. PRESERVE AND PROTECT ALL EXISTING SITE IMPROVEMENTS INDICATED TO REMAIN FROM DAMAGE DURING CONSTRUCTION.

## SITE PLAN KEYNOTES

| SYMBOL | CURB DESCRIPTION | DETAIL |
|---|---|---|
| C-01 | CURB, CONCRETE, EARLHAM STANDARD CURB AND GUTTER | 7/L003 |

| SYMBOL | CURB RAMP DESCRIPTION | DETAIL |
|---|---|---|
| CR-01 | CURB RAMP, TYPE A | 2/L005 |
| CR-02 | CURB RAMP, TYPE C | 3/L005 |

| SYMBOL | EDGINGS DESCRIPTION | DETAIL |
|---|---|---|
| E-01 | EDGING, STEEL EDGING RESTRAINT, TYP. | 12/L002 |

| SYMBOL | FENCE DESCRIPTION | DETAIL |
|---|---|---|
| F-01 | DECORATIVE METAL FENCE | 2/L604 |

| SYMBOL | GATE DESCRIPTION | DETAIL |
|---|---|---|
| G-01 | METAL GATE WITH PANIC HARDWARE | 2/L604 |

| SYMBOL | MISC DESCRIPTION | DETAIL |
|---|---|---|
| MS-01 | STONE SLAB BENCH | 2/L605 |
| MS-02 | STEP STONE, TYP. | 1/L605 |
| MS-03 | ROCK BOULDER | |
| MS-04 | OUTCROPPING STONE, HALQUIST STONE, LANNON OUTCROPPING, 5-12" THICKNESS X VARIABLE LENGTH ( CONTRACTOR TO FIT TO SIZE AS REQUIRED) | |
| MS-05 | EXHAUST PIPE OUTLET, SEE CIVIL & MECHANICAL | |

| SYMBOL | PAVING DESCRIPTION | DETAIL |
|---|---|---|
| P-01 | PAVEMENT, CONTROL JOINT, TYP. | 6/L003 |
| P-02 | PAVEMENT, EXPANSION JOINT, TYP. | 6/L003 |
| P-03 | PAVEMENT, 4" CONCRETE | 1/L003 |
| P-04 | PAVEMENT, 5" CONCRETE, | 2/L003 |
| P-05 | PAVEMENT, 6" HEAVY DUTY CONCRETE | 3/L003 |
| P-06 | PAVEMENT, DECOMPOSED GRANITE; KAFKA GRANITE, 1/4" MINUS, IMPERIAL GRAY GRANITE | 8/L003 |
| P-07 | PAVEMENT, ASPHALT PATCH; SEE CIVIL FOR UTILITY LINE LOCATIONS | |
| P-08 | PAVEMENT, EXISTING CONCRETE TO REMAIN | |

| SYMBOL | RAIL DESCRIPTION | DETAIL |
|---|---|---|
| R-01 | RAILING, GRADE-MOUNTED, STAINLESS STEEL HANDRAIL SEE SHEET L004 FOR RAILING DETAILS | |
| R-02 | RAILING, WALL-MOUNTED, STAINLESS STEEL HANDRAIL SEE SHEET L004 FOR RAILING DETAILS | |

| SYMBOL | SITE FURNISHINGS DESCRIPTION | DETAIL |
|---|---|---|
| SF-01 | BIKE RACK, FORMS + SURFACES; BIKE GARDEN BIKE RACK, CONFIGURATION B | |

| SYMBOL | STAIRWAYS DESCRIPTION | DETAIL |
|---|---|---|
| ST-01 | STAIRS, ARCHITECTURAL CONCRETE STAIRS | |
| ST-02 | STAIRWAY RUNNEL | 10/L004 |

| SYMBOL | WALL DESCRIPTION | DETAIL |
|---|---|---|
| W-01 | WALL, ARCHITECTURAL CONCRETE RETAINING WALL WITH PLANTER | |
| W-02 | WALL, ARCHITECTURAL CONCRETE RETAINING WALL | |

## NORTHING/EASTING POINT SCHEDULE

| POINT | NORTHING | EASTING |
|---|---|---|
| 53 | N 1667767.33340 | E 539775.07476 |
| 54 | N 1667768.84798 | E 539757.27039 |
| 55 | N 1667768.51998 | E 539724.08318 |
| 56 | N 1667768.38395 | E 539710.12570 |
| 57 | N 1667783.25983 | E 539724.04702 |
| 58 | N 1667783.12242 | E 539710.08697 |
| 59 | N 1667880.11154 | E 539709.83209 |
| 60 | N 1667881.40659 | E 539723.82431 |
| 61 | N 1667895.40852 | E 539723.77272 |
| 62 | N 1667883.69091 | E 539834.97882 |
| 63 | N 1667885.02513 | E 539849.95659 |
| 64 | N 1667793.55017 | E 539925.45864 |
| 65 | N 1667765.02621 | E 540005.36820 |
| 66 | N 1667974.31362 | E 540033.71833 |


boora

Boora Architects Inc.
720 SW Washington Suite 800
Portland, OR 97205
T. 503.226.1575 F. 503.241.7429
www.boora.com

BROWNING DAY MULLINS DIERDORF LANDSCAPE ARCHITECTS

Browning Day Mullins Dierdorf, Inc.
Architecture
Landscape Architecture
Planning

626 North Illinois Street
Indianapolis, Indiana 46204
P: 317.635.5030
F: 317.634.5409
E: www.bdmd.com


JONATHAN D. HUTSAR REGISTERED No. LA20500154 STATE OF INDIANA LANDSCAPE ARCHITECT

# Earlham College Science Complex Phase 2

801 National Road West
Richmond, IN 47374-4095

| MARK | DATE | DESCRIPTION |
|---|---|---|
| 1 | 01.15.2014 | ADDENDUM 2 |

| | |
|---|---|
| Issued: | FEBRUARY 28, 2014 |
| Scale: | 1" = 20'-0" |
| Drawn By: | BAS |
| Reviewed By: | JDH |
| File: | L-100_Overall Plans.dwg |

Copyright

CONFORMED SET

OVERALL SITE PLAN

L110

1 Earlham College Science Complex - Phase 2
Overall Site Plan
L110 1"=20'-0"

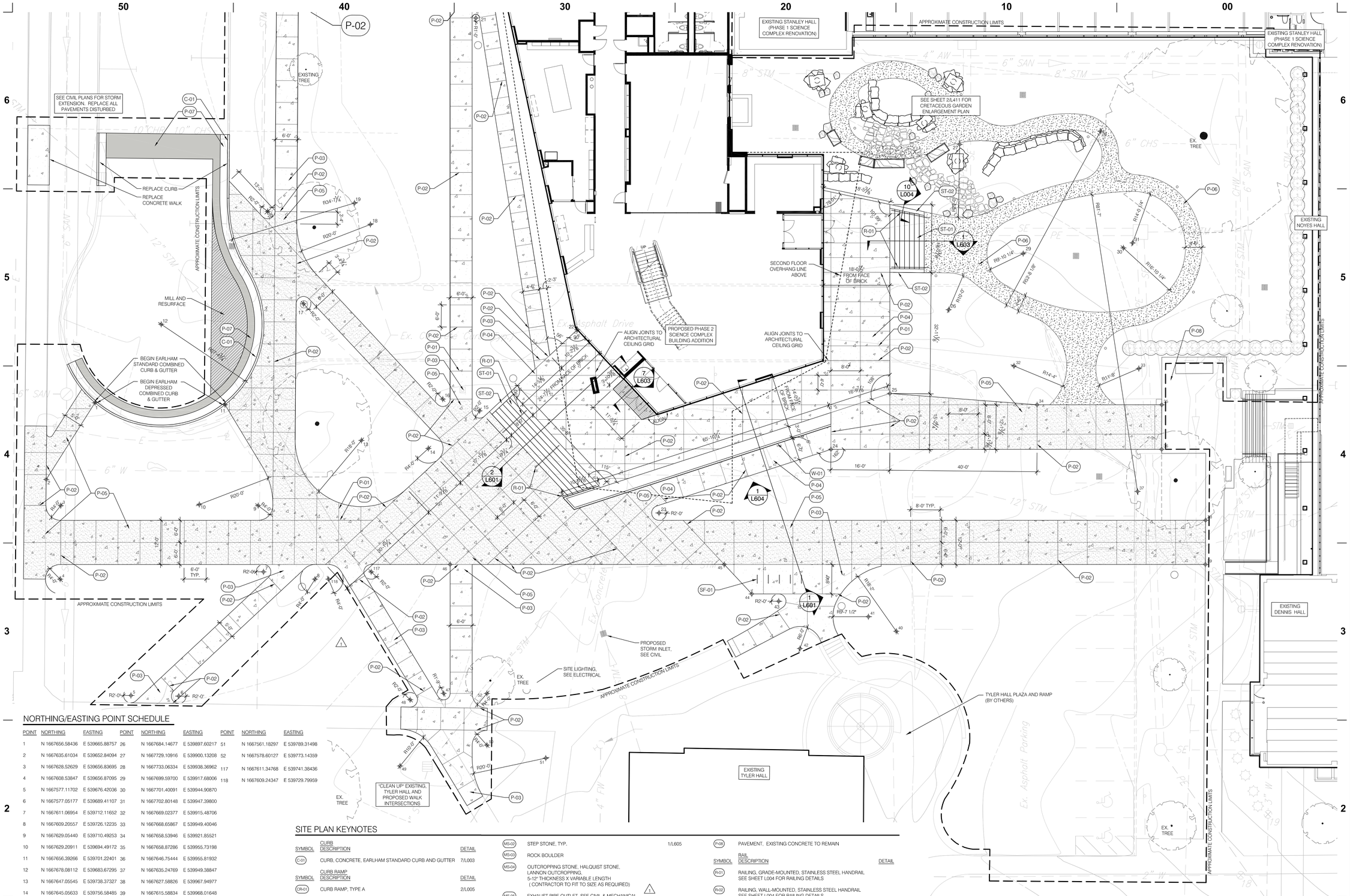


## NORTHING/EASTING POINT SCHEDULE

| POINT | NORTHING | EASTING | POINT | NORTHING | EASTING | POINT | NORTHING | EASTING |
|---|---|---|---|---|---|---|---|---|
| 1 | N 1667656.58436 | E 539665.88757 | 26 | N 1667684.14677 | E 539897.60217 | 51 | N 1667561.18297 | E 539789.31498 |
| 2 | N 1667635.61034 | E 539652.84094 | 27 | N 1667729.10916 | E 539900.13208 | 52 | N 1667578.60127 | E 539773.14359 |
| 3 | N 1667628.52629 | E 539656.83695 | 28 | N 1667733.06334 | E 539938.36962 | 117 | N 1667611.34768 | E 539741.38436 |
| 4 | N 1667608.53847 | E 539656.87095 | 29 | N 1667699.59700 | E 539917.68006 | 118 | N 1667609.24347 | E 539729.79959 |
| 5 | N 1667577.11702 | E 539676.42036 | 30 | N 1667701.40091 | E 539944.90870 | | | |
| 6 | N 1667577.05177 | E 539689.41107 | 31 | N 1667702.80148 | E 539947.39800 | | | |
| 7 | N 1667611.06954 | E 539712.11652 | 32 | N 1667669.02377 | E 539915.48706 | | | |
| 8 | N 1667609.20557 | E 539726.12235 | 33 | N 1667668.65867 | E 539949.40046 | | | |
| 9 | N 1667629.05440 | E 539710.49253 | 34 | N 1667658.53946 | E 539921.85521 | | | |
| 10 | N 1667629.20911 | E 539694.49172 | 35 | N 1667658.87286 | E 539955.73198 | | | |
| 11 | N 1667656.39266 | E 539701.22401 | 36 | N 1667646.75444 | E 539955.81932 | | | |
| 12 | N 1667678.08112 | E 539683.67295 | 37 | N 1667635.24769 | E 539949.38847 | | | |
| 13 | N 1667647.05545 | E 539738.37327 | 38 | N 1667627.58826 | E 539967.94977 | | | |
| 14 | N 1667645.05633 | E 539756.58485 | 39 | N 1667615.58834 | E 539968.01648 | | | |
| 15 | N 1667655.41819 | E 539770.38405 | 40 | N 1667596.60355 | E 539884.20455 | | | |
| 16 | N 1667658.50314 | E 539760.35657 | 41 | N 1667600.49508 | E 539876.59621 | | | |
| 17 | N 1667684.02480 | E 539722.28263 | 42 | N 1667591.64728 | E 539858.08125 | | | |
| 18 | N 1667705.78523 | E 539740.23902 | 43 | N 1667604.44777 | E 539852.16775 | | | |
| 19 | N 1667711.54978 | E 539735.86058 | 44 | N 1667606.37576 | E 539844.84051 | | | |
| 20 | N 1667709.05061 | E 539712.28160 | 45 | N 1667614.30187 | E 539837.29277 | | | |
| 21 | N 1667762.18497 | E 539768.33650 | 46 | N 1667613.56861 | E 539762.81137 | | | |
| 22 | N 1667677.71013 | E 539796.72219 | 47 | N 1667578.50598 | E 539761.39396 | | | |
| 23 | N 1667628.12649 | E 539819.42554 | 48 | N 1667576.69742 | E 539752.29055 | | | |
| 24 | N 1667645.87016 | E 539865.97721 | 49 | N 1667558.67279 | E 539749.74336 | | | |
| 25 | N 1667661.21450 | E 539881.82694 | 50 | N 1667564.57140 | E 539773.28185 | | | |

## SITE PLAN KEYNOTES

| SYMBOL | CURB DESCRIPTION | DETAIL |
|---|---|---|
| C-01 | CURB, CONCRETE, EARLHAM STANDARD CURB AND GUTTER | 7/L003 |

| SYMBOL | CURB RAMP DESCRIPTION | DETAIL |
|---|---|---|
| CR-01 | CURB RAMP, TYPE A | 2/L005 |
| CR-02 | CURB RAMP, TYPE C | 3/L005 |

| SYMBOL | EDGINGS DESCRIPTION | DETAIL |
|---|---|---|
| E-01 | EDGING, STEEL EDGING RESTRAINT, TYP. | 12/L002 |

| SYMBOL | FENCE DESCRIPTION | DETAIL |
|---|---|---|
| F-01 | DECORATIVE METAL FENCE | 2/L604 |

| SYMBOL | GATE DESCRIPTION | DETAIL |
|---|---|---|
| G-01 | METAL GATE WITH PANIC HARDWARE | 2/L604 |

| SYMBOL | MISC DESCRIPTION | DETAIL |
|---|---|---|
| MS-01 | STONE SLAB BENCH | 2/L605 |
| MS-02 | STEP STONE, TYP. | 1/L605 |
| MS-03 | ROCK BOULDER | |
| MS-04 | OUTCROPPING STONE, HALQUIST STONE, LANNON OUTCROPPING. 5-12" THICKNESS X VARIABLE LENGTH ( CONTRACTOR TO FIT TO SIZE AS REQUIRED) | 1 |
| MS-05 | EXHAUST PIPE OUTLET, SEE CIVIL & MECHANICAL | |

| SYMBOL | PAVING DESCRIPTION | DETAIL |
|---|---|---|
| P-01 | PAVEMENT, CONTROL JOINT, TYP. | 6/L003 |
| P-02 | PAVEMENT, EXPANSION JOINT, TYP. | 6/L003 |
| P-03 | PAVEMENT, 4" CONCRETE | 1/L003 |
| P-04 | PAVEMENT, 5" CONCRETE, | 2/L003 |
| P-05 | PAVEMENT, 6" HEAVY DUTY CONCRETE | 3/L003 |
| P-06 | PAVEMENT, DECOMPOSED GRANITE; KAFKA GRANITE, 1/4" MINUS, IMPERIAL GRAY GRANITE | 8/L003 |
| P-07 | PAVEMENT, ASPHALT PATCH; SEE CIVIL FOR UTILITY LINE LOCATIONS | |
| P-08 | PAVEMENT, EXISTING CONCRETE TO REMAIN | |

| SYMBOL | RAIL DESCRIPTION | DETAIL |
|---|---|---|
| R-01 | RAILING, GRADE-MOUNTED, STAINLESS STEEL HANDRAIL SEE SHEET L004 FOR RAILING DETAILS | |
| R-02 | RAILING, WALL-MOUNTED, STAINLESS STEEL HANDRAIL SEE SHEET L004 FOR RAILING DETAILS | |

| SYMBOL | SITE FURNISHINGS DESCRIPTION | DETAIL |
|---|---|---|
| SF-01 | BIKE RACK, FORMS + SURFACES; BIKE GARDEN BIKE RACK, CONFIGURATION B | |

| SYMBOL | STAIRWAYS DESCRIPTION | DETAIL |
|---|---|---|
| ST-01 | STAIRS, ARCHITECTURAL CONCRETE STAIRS | |
| ST-02 | STAIRWAY RUNNEL | 10/L004 |

| SYMBOL | WALL DESCRIPTION | DETAIL |
|---|---|---|
| W-01 | WALL, ARCHITECTURAL CONCRETE RETAINING WALL WITH PLANTER | |
| W-02 | WALL, ARCHITECTURAL CONCRETE RETAINING WALL | |

## SITE PLAN GENERAL NOTES

1. DO NOT SCALE DRAWINGS.
2. COORDINATE ALL WORK WITH OTHER DESIGN DISCIPLINES.
3. COORDINATE ALL WORK WITH SPECIFICATIONS.
4. PRESERVE AND PROTECT ALL EXISTING SITE IMPROVEMENTS INDICATED TO REMAIN FROM DAMAGE DURING CONSTRUCTION.

1 Earlham College Science Complex - Phase 2
Site Plan
L111 1"=10'-0"

0' 5' 10' 20'

boora
Boora Architects Inc.
720 SW Washington Suite 800
Portland, OR 97205
T. 503.226.1575 F. 503.241.7429
www.boora.com

BROWNING DAY MULLINS DIERDORF LANDSCAPE ARCHITECTS
Browning Day Mullins Dierdorf, Inc.
Architecture
Landscape Architecture
Planning
626 North Illinois Street
Indianapolis, Indiana 46204
P: 317.635.5030
F: 317.634.5409
E: www.bdmd.com

JONATHAN D. HUTSLAR REGISTERED No. LA20500154 STATE OF INDIANA LANDSCAPE ARCHITECT

Earlham College Science Complex
Phase 2
801 National Road West
Richmond, IN 47374-4095

| MARK | DATE | DESCRIPTION |
|---|---|---|
| 1 | 01.15.2014 | ADDENDUM 2 |

Issued: FEBRUARY 28, 2014
Scale: 1" = 10'-0"
Drawn By: BAS
Reviewed By: JDH
File: L-100_Overall Plans.dwg

Copyright

CONFORMED SET

SITE PLAN

L111

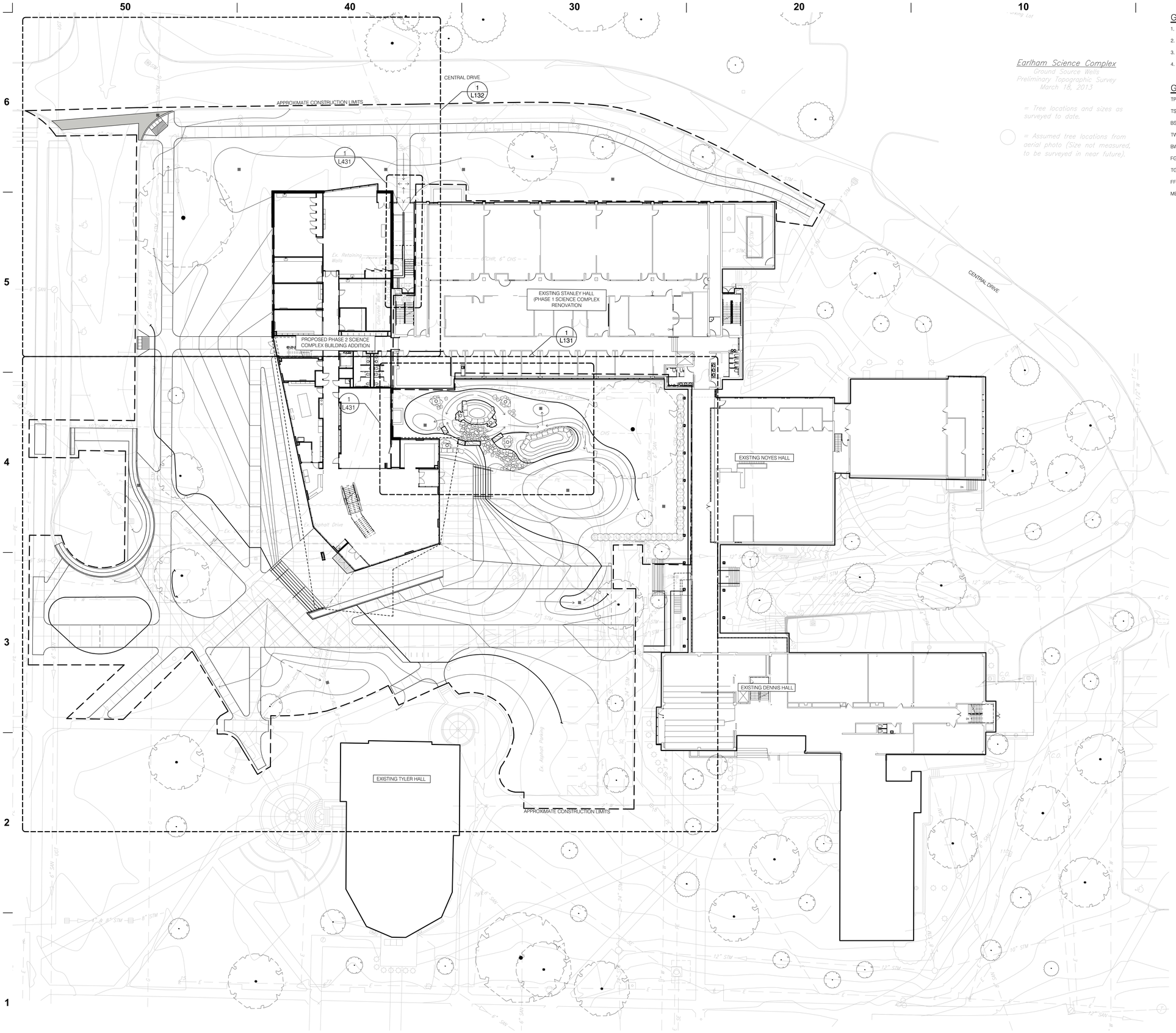


## GRADING PLAN GENERAL NOTES

1. DO NOT SCALE DRAWINGS.
2. COORDINATE ALL WORK WITH OTHER DESIGN DISCIPLINES.
3. COORDINATE ALL WORK WITH SPECIFICATIONS.
4. PRESERVE AND PROTECT ALL EXISTING SITE IMPROVEMENTS INDICATED TO REMAIN FROM DAMAGE DURING CONSTRUCTION.

## GRADING PLAN KEYNOTES

| | |
|---|---|
| TP | TOP OF PAVEMENT |
| TS | TOP OF STEP |
| BS | BOTTOM OF STEP |
| TW | TOP OF WALL |
| BW | BOTTOM OF WALL |
| FG | FINISH GRADE |
| TG | TOP OF GRATE (FOR EXHAUST OUTLET, SEE DETAILS) |
| FFE | FINISH FLOOR ELEVATION |
| MEG | MATCH EXISTING GRADE |

**1** L130 Earlham College Science Complex - Phase 2
Overall Site Grading Plan
1"=20'-0"

0' 10' 20' 40'

boora

**Boora Architects Inc.**
**720 SW Washington Suite 800**
**Portland, OR 97205**
**T. 503.226.1575 F. 503.241.7429**
**www.boora.com**

BROWNING DAY MULLINS DIERDORF LANDSCAPE ARCHITECTS

Browning Day Mullins Dierdorf, Inc.
Architecture
Landscape Architecture
Planning

626 North Illinois Street
Indianapolis, Indiana 46204
P: 317.635.5030
F: 317.634.5409
E: www.bdmd.com

JONATHAN D. HUTSON REGISTERED No. LA20500154 STATE OF INDIANA LANDSCAPE ARCHITECT

# Earlham College Science Complex Phase 2

801 National Road West
Richmond, IN 47374-4095

| MARK | DATE | DESCRIPTION |
|---|---|---|

| | |
|---|---|
| Issued: | FEBRUARY 28, 2014 |
| Scale: | 1" = 20'-0" |
| Drawn By: | BAS |
| Reviewed By: | JDH |
| File: | L-100_Overall Plans.dwg |

Copyright

CONFORMED SET

OVERALL GRADING SITE PLAN

L130

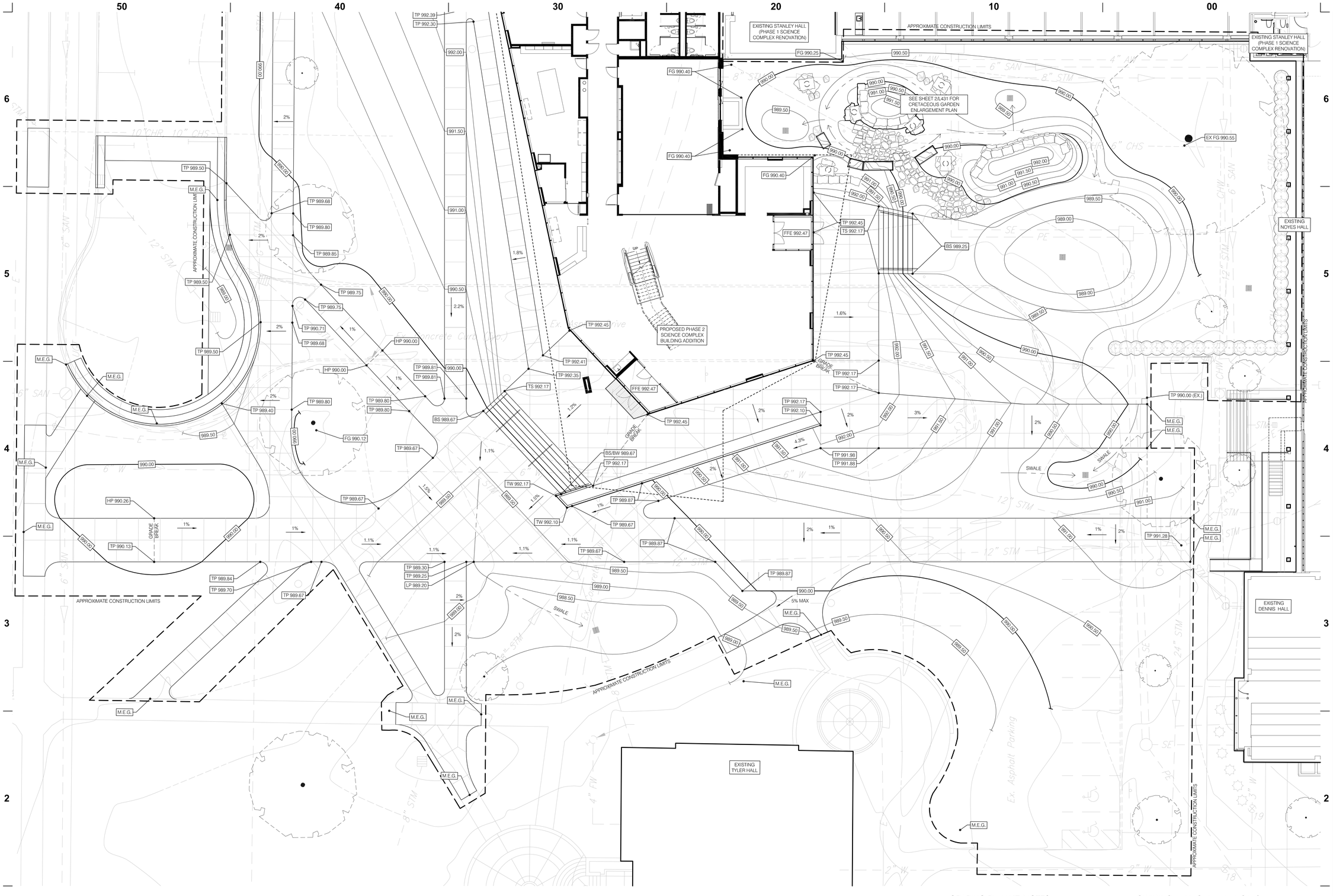


## GRADING PLAN KEYNOTES

| | |
|---|---|
| TP | TOP OF PAVEMENT |
| TS | TOP OF STEP |
| BS | BOTTOM OF STEP |
| TW | TOP OF WALL |
| BW | BOTTOM OF WALL |
| FG | FINISH GRADE |
| TG | TOP OF GRATE (FOR EXHAUST OUTLET, SEE DETAILS) |
| FFE | FINISH FLOOR ELEVATION |
| MEG | MATCH EXISTING GRADE |

## GRADING PLAN GENERAL NOTES

1. DO NOT SCALE DRAWINGS.
2. COORDINATE ALL WORK WITH OTHER DESIGN DISCIPLINES.
3. COORDINATE ALL WORK WITH SPECIFICATIONS.
4. PRESERVE AND PROTECT ALL EXISTING SITE IMPROVEMENTS INDICATED TO REMAIN FROM DAMAGE DURING CONSTRUCTION.

1 L131 Earlham College Science Complex - Phase 2
Site Grading Plan
1"=10'-0"

0 5' 10' 20'


boora

Boora Architects Inc.
720 SW Washington Suite 800
Portland, OR 97205
T. 503.226.1575 F. 503.241.7429
www.boora.com

BROWNING DAY MULLINS DIERDORF LANDSCAPE ARCHITECTS
Browning Day Mullins Dierdorf, Inc.
Architecture
Landscape Architecture
Planning
626 North Illinois Street
Indianapolis, Indiana 46204
P: 317.635.5030
F: 317.634.5409
E: www.bdmd.com


JONATHAN D. HUTSLAR REGISTERED No. LA20500154 STATE OF INDIANA LANDSCAPE ARCHITECT

# Earlham College Science Complex Phase 2

801 National Road West
Richmond, IN 47374-4095

| MARK | DATE | DESCRIPTION |
|---|---|---|

| | |
|---|---|
| Issued: | FEBRUARY 28, 2014 |
| Scale: | 1" = 10'-0" |
| Drawn By: | BAS |
| Reviewed By: | JDH |
| File: | L-100_Overall Plans.dwg |

Copyright

CONFORMED SET

SITE GRADING PLAN

L131

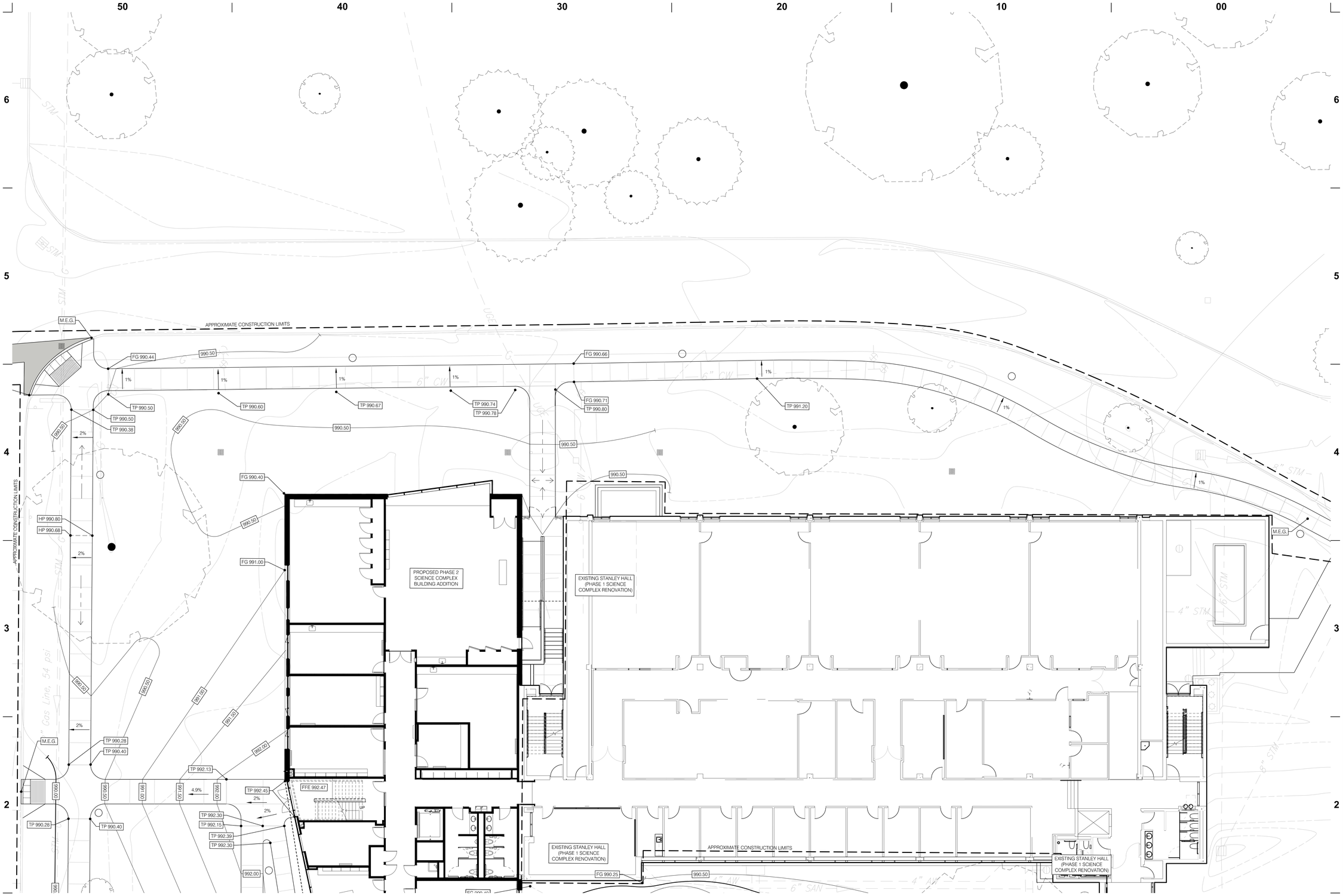


## GRADING PLAN KEYNOTES

| | |
|---|---|
| TP | TOP OF PAVEMENT |
| TS | TOP OF STEP |
| BS | BOTTOM OF STEP |
| TW | TOP OF WALL |
| BW | BOTTOM OF WALL |
| FG | FINISH GRADE |
| TG | TOP OF GRATE (FOR EXHAUST OUTLET, SEE DETAILS) |
| FFE | FINISH FLOOR ELEVATION |
| MEG | MATCH EXISTING GRADE |

## GRADING PLAN GENERAL NOTES

1. DO NOT SCALE DRAWINGS.
2. COORDINATE ALL WORK WITH OTHER DESIGN DISCIPLINES.
3. COORDINATE ALL WORK WITH SPECIFICATIONS.
4. PRESERVE AND PROTECT ALL EXISTING SITE IMPROVEMENTS INDICATED TO REMAIN FROM DAMAGE DURING CONSTRUCTION.

1 Earlham College Science Complex - Phase 2
Site Grading Plan
L132 1"=10'-0"

0 5 10 20


boora

Boora Architects Inc.
720 SW Washington Suite 800
Portland, OR 97205
T. 503.226.1575 F. 503.241.7429
www.boora.com

BROWNING DAY MULLINS DIERDORF LANDSCAPE ARCHITECTS

Browning Day Mullins Dierdorf, Inc.
Architecture
Landscape Architecture
Planning

626 North Illinois Street
Indianapolis, Indiana 46204
P: 317.635.5030
F: 317.634.5409
E: www.bdmd.com


JONATHAN D. HUTSAR REGISTERED No. LA20500154 STATE OF INDIANA LANDSCAPE ARCHITECT

# Earlham College Science Complex Phase 2

801 National Road West
Richmond, IN 47374-4095

| MARK | DATE | DESCRIPTION |
|---|---|---|

| | |
|---|---|
| Issued: | FEBRUARY 28, 2014 |
| Scale: | 1" = 10'-0" |
| Drawn By: | BAS |
| Reviewed By: | JDH |
| File: | L-100_Overall Plans.dwg |

Copyright

CONFORMED SET

SITE GRADING PLAN

L132

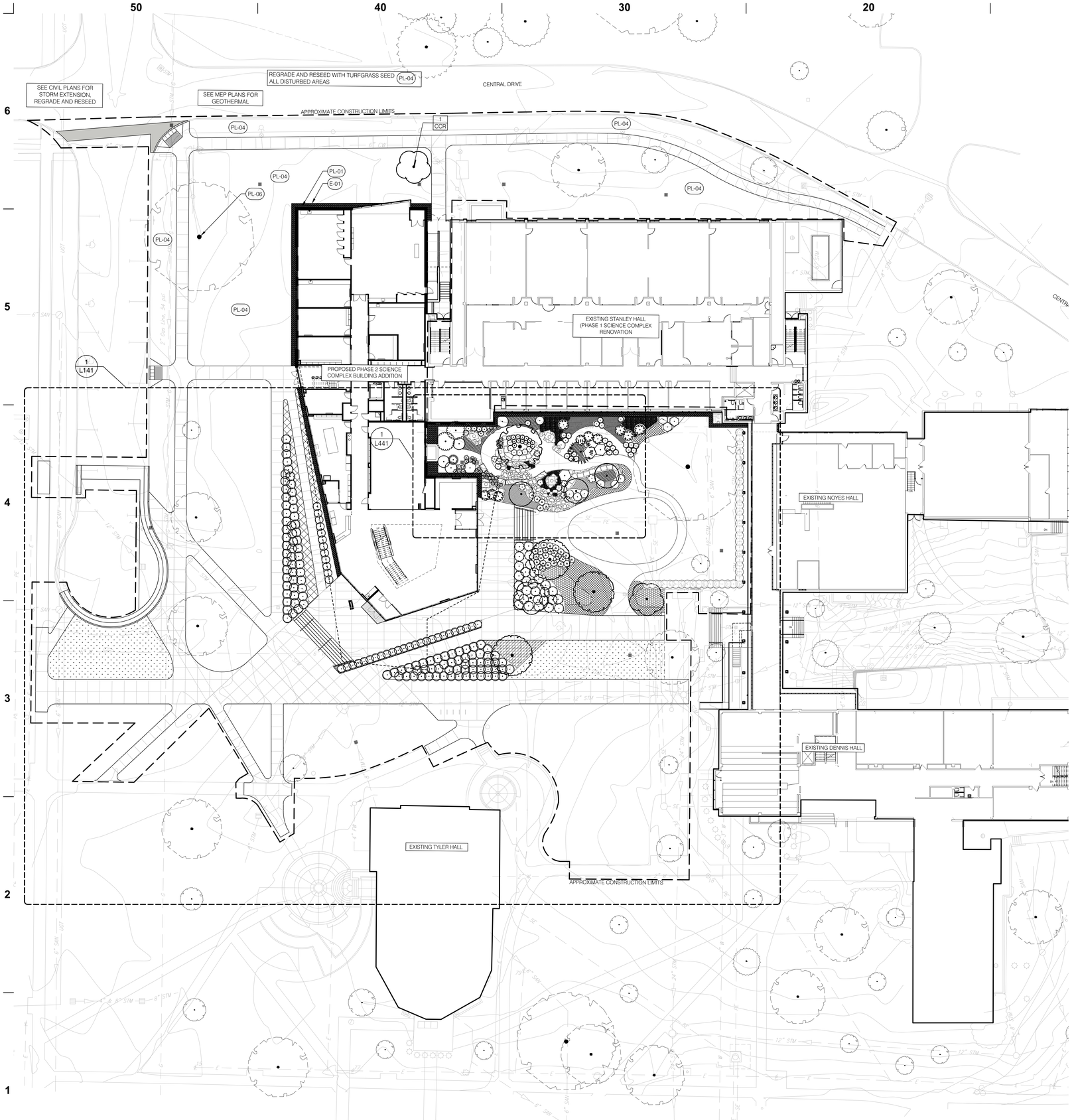


## PLANTING PLAN GENERAL NOTES

1. DO NOT SCALE DRAWINGS.
2. COORDINATE ALL WORK WITH OTHER DESIGN DISCIPLINES.
3. COORDINATE ALL WORK WITH SPECIFICATIONS.
4. PRESERVE AND PROTECT ALL EXISTING SITE IMPROVEMENTS INDICATED TO REMAIN FROM DAMAGE DURING CONSTRUCTION.

## PLANTING PLAN KEYNOTES

| SYMBOL | EDGINGS DESCRIPTION | DETAIL |
|---|---|---|
| E-01 | EDGING, STEEL EDGING RESTRAINT, TYP. | 12/L002 |

| SYMBOL | PLANTING DESCRIPTION | DETAIL |
|---|---|---|
| PL-01 | DECORATIVE AGGREGATE STRIP, TYP.; MIN. 2' -0" WIDTH | 12/L002 |
| PL-02 | SPADE EDGE | 7/L002 |
| PL-03 | PLANTING AREA; MULCH WITH MIN. 3" ORGANIC MULCH | |
| PL-04 | TURFGRASS | |
| PL-05 | REINFORCED TURFGRASS, INVISIBLE STRUCTURES GRASSPAVE2 | 6/L605 |
| PL-06 | EXISTING TREE TO REMAIN | |

## PLANT SCHEDULE

| TREES | QTY | BOTANICAL NAME | COMMON NAME | CONT | CAL | HEIGHT |
|---|---|---|---|---|---|---|
| CCR | 3 | CERCIS CANADENSIS | EASTERN REDBUD | B & B | 4"CAL | |
| CK | 3 | CLADRASTIS KENTUKEA | AMERICAN YELLOWWOOD | B & B | 4"CAL | |
| MG | 1 | METASEQUOIA GLYPTOSTROBOIDES | DAWN REDWOOD | B & B | 4"CAL | |
| SV | 1 | SCIADOPITYS VERTICILLATA | UMBRELLA PINE | B & B | | 7-8` |
| TA | 3 | TROCHODENDRON ARALIOIDES | WHEEL TREE | B & B | 4"CAL | |

| SHRUBS | QTY | BOTANICAL NAME | COMMON NAME | CONT | HEIGHT |
|---|---|---|---|---|---|
| AF | 8 | ATHYRIUM FILIX-FEMINA | COMMON LADY FERN | 1 GAL | |
| CC | 3 | CALYCANTHUS FLORIDUS | CAROLINA ALLSPICE | 5 GAL | |
| CG | 11 | CAREX GRAYI | BURR SEDGE | 1 GAL | |
| CA | 29 | CEANOTHUS AMERICANUS | NEW JERSEY TEA | 3 GAL | |
| CF | 5 | CEPHALOTAXUS HARRINGTONIA | JAPANESE PLUM YEW | 7 GAL | |
| CH | 6 | CEPHALOTAXUS HARRINGTONIA `DUKE`S GARDEN` | DUKE`S GARDEN PLUM YEW | 3 GAL | |
| CL | 25 | CHASMANTHIUM LATIFOLIUM | NORTHERN SEA OATS | 1 GAL | |
| DF | 14 | DRYOPTERIS FILIX-MAS | MALE FERN | 1 GAL | |
| FG | 31 | FOTHERGILLA GARDENII | DWARF FOTHERGILLA | 3 GAL | |
| IVJ | 1 | ILEX VERTICILLATA `JIM DANDY` | JIM DANDY WINTERBERRY | 3 GAL | |
| IVR | 8 | ILEX VERTICILLATA `RED SPRITE` | RED SPRITE WINTERBERRY | 3 GAL | |
| JC | 10 | JUNIPERUS CHINENSIS `SEA GREEN` | SEA GREEN JUNIPER | 3 GAL | |
| JCB | 111 | JUNIPERUS CONFERTA `BLUE PACIFIC` | BLUE PACIFIC JUNIPER | 3 GAL | |
| LB | 2 | LINDERA BENZOIN | SPICEBUSH | 7 GAL | |
| MA | 3 | MAHONIA AQUIFOLIUM | OREGON GRAPE | 3 GAL | |
| MS | 1 | MATTEUCCIA STRUTHIOPTERIS | OSTRICH FERN | 1 GAL | |
| OC | 6 | OSMUNDA CINNAMOMEA | CINNAMON FERN | 1 GAL | |
| PA | 33 | POLYSTICHUM ACROSTICHOIDES | CHRISTMAS FERN | 1 GAL | |
| TE | 37 | TAXUS X MEDIA `EVERLOW` | EVERLOW YEW | B & B | 12" HT. |

| GROUND COVERS | QTY | BOTANICAL NAME | COMMON NAME | CONT | SPACING |
|---|---|---|---|---|---|
| CP | 115 | CAREX PENSYLVANICA | PENNSYLVANIA SEDGE | 1 GAL | 12" o.c. |
| CR | 151 | CAREX RADIATA | STRAIGHT STYLE WOOD SEDGE | 1 GAL | 15" o.c. |
| DA | 60 | DIARRHENA AMERICANA | AMERICAN BEAKGRAIN | 1 GAL | 12" o.c. |
| HC | 226 | HYPERICUM CALYCINUM | CREEPING ST. JOHN`S WORT | 1 GAL | 18" o.c. |
| IL | 57 | ITEA VIRGINICA `LITTLE HENRY` TM | LITTLE HENRY SWEETSPIRE | 2 GAL | 24" o.c. |
| LM | 698 | LIRIOPE MUSCARI `BIG BLUE` | BIG BLUE LILYTURF | 4" POT | 12" o.c. |
| PT | 193 | PACHYSANDRA TERMINALIS | JAPANESE PACHYSANDRA | 1 GAL | 12" o.c. |
| VC | 530 | VINCA MINOR | COMMON PERIWINKLE | 1 GAL | 12" o.c. |

1 Earlham College Science Complex - Phase 2
Overall Site Planting Plan
L140 1"=20'-0"

0' 10' 20' 40'

boora
Boora Architects Inc.
720 SW Washington Suite 800
Portland, OR 97205
T. 503.226.1575 F. 503.241.7429
www.boora.com

BROWNING DAY MULLINS DIERDORF LANDSCAPE ARCHITECTS
Browning Day Mullins Dierdorf, Inc.
Architecture
Landscape Architecture
Planning
626 North Illinois Street
Indianapolis, Indiana 46204
P: 317.635.5030
F: 317.634.5409
E: www.bdmd.com

JONATHAN D. HUTSAR REGISTERED No. LA20500154 STATE OF INDIANA LANDSCAPE ARCHITECT

Earlham College Science Complex
Phase 2
801 National Road West
Richmond, IN 47374-4095

| MARK | DATE | DESCRIPTION |
|---|---|---|

| | |
|---|---|
| Issued: | FEBRUARY 28, 2014 |
| Scale: | 1" = 20'-0" |
| Drawn By: | BAS |
| Reviewed By: | JDH |
| File: | L-100_Overall Plans.dwg |

Copyright

CONFORMED SET

OVERALL SITE PLANTING PLAN

L140

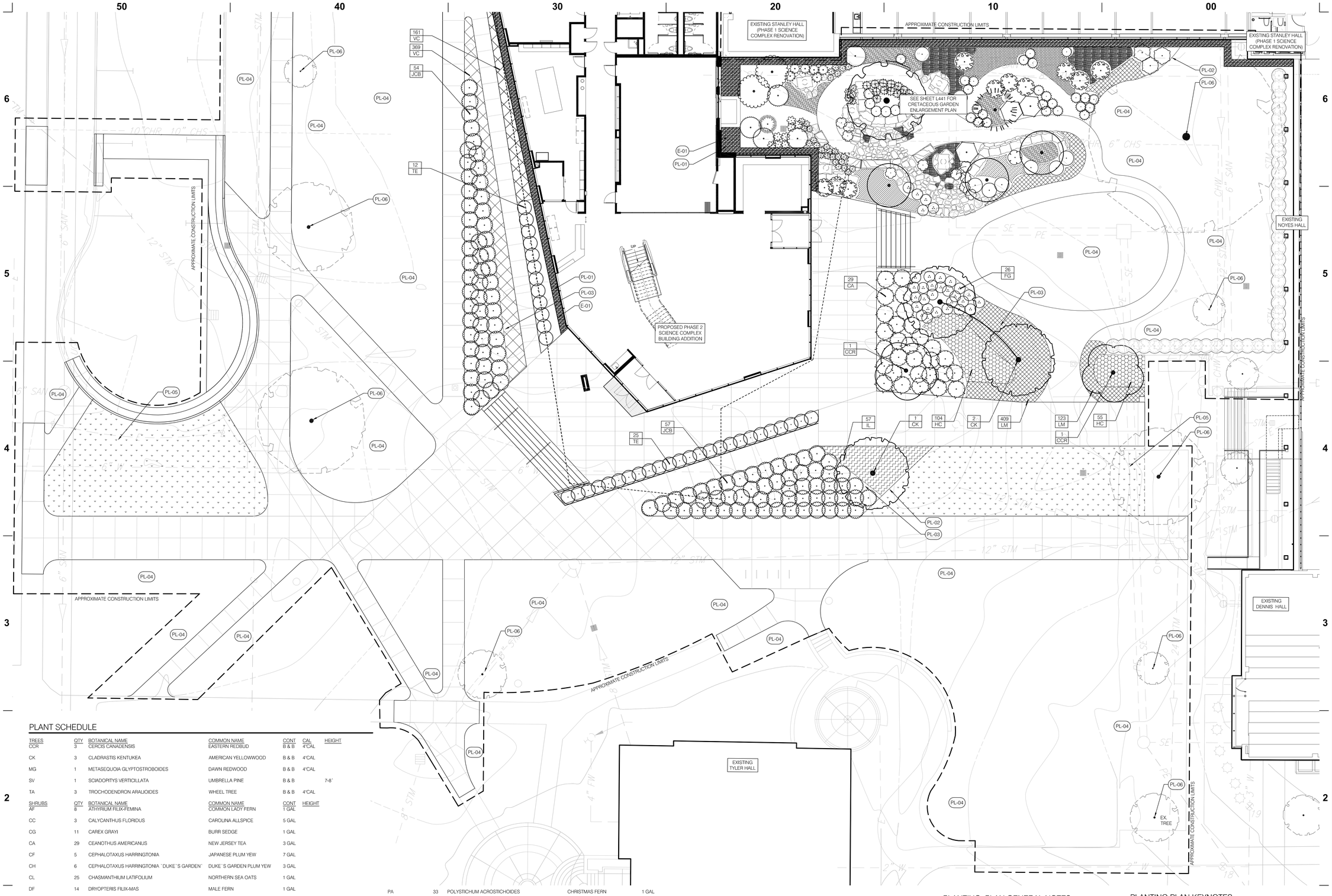


## PLANT SCHEDULE

| TREES | QTY | BOTANICAL NAME | COMMON NAME | CONT | CAL | HEIGHT |
|---|---|---|---|---|---|---|
| CCR | 3 | CERCIS CANADENSIS | EASTERN REDBUD | B & B | 4"CAL | |
| CK | 3 | CLADRASTIS KENTUKEA | AMERICAN YELLOWWOOD | B & B | 4"CAL | |
| MG | 1 | METASEQUOIA GLYPTOSTROBOIDES | DAWN REDWOOD | B & B | 4"CAL | |
| SV | 1 | SCIADOPITYS VERTICILLATA | UMBRELLA PINE | B & B | | 7-8' |
| TA | 3 | TROCHODENDRON ARALIOIDES | WHEEL TREE | B & B | 4"CAL | |

| SHRUBS | QTY | BOTANICAL NAME | COMMON NAME | CONT | HEIGHT |
|---|---|---|---|---|---|
| AF | 8 | ATHYRIUM FILIX-FEMINA | COMMON LADY FERN | 1 GAL | |
| CC | 3 | CALYCANTHUS FLORIDUS | CAROLINA ALLSPICE | 5 GAL | |
| CG | 11 | CAREX GRAYI | BURR SEDGE | 1 GAL | |
| CA | 29 | CEANOTHUS AMERICANUS | NEW JERSEY TEA | 3 GAL | |
| CF | 5 | CEPHALOTAXUS HARRINGTONIA | JAPANESE PLUM YEW | 7 GAL | |
| CH | 6 | CEPHALOTAXUS HARRINGTONIA `DUKE`S GARDEN` | DUKE`S GARDEN PLUM YEW | 3 GAL | |
| CL | 25 | CHASMANTHIUM LATIFOLIUM | NORTHERN SEA OATS | 1 GAL | |
| DF | 14 | DRYOPTERIS FILIX-MAS | MALE FERN | 1 GAL | |
| FG | 31 | FOTHERGILLA GARDENII | DWARF FOTHERGILLA | 3 GAL | |
| IVJ | 1 | ILEX VERTICILLATA `JIM DANDY` | JIM DANDY WINTERBERRY | 3 GAL | |
| IVR | 8 | ILEX VERTICILLATA `RED SPRITE` | RED SPRITE WINTERBERRY | 3 GAL | |
| JC | 10 | JUNIPERUS CHINENSIS `SEA GREEN` | SEA GREEN JUNIPER | 3 GAL | |
| JCB | 111 | JUNIPERUS CONFERTA `BLUE PACIFIC` | BLUE PACIFIC JUNIPER | 3 GAL | |
| LB | 2 | LINDERA BENZOIN | SPICEBUSH | 7 GAL | |
| MA | 3 | MAHONIA AQUIFOLIUM | OREGON GRAPE | 3 GAL | |
| MS | 1 | MATTEUCCIA STRUTHIOPTERIS | OSTRICH FERN | 1 GAL | |
| OC | 6 | OSMUNDA CINNAMOMEA | CINNAMON FERN | 1 GAL | |
| PA | 33 | POLYSTICHUM ACROSTICHOIDES | CHRISTMAS FERN | 1 GAL | |
| TE | 37 | TAXUS X MEDIA `EVERLOW` | EVERLOW YEW | B & B | 12" HT. |

| GROUND COVERS | QTY | BOTANICAL NAME | COMMON NAME | CONT | SPACING |
|---|---|---|---|---|---|
| CP | 115 | CAREX PENSYLVANICA | PENNSYLVANIA SEDGE | 1 GAL | 12" o.c. |
| CR | 151 | CAREX RADIATA | STRAIGHT STYLE WOOD SEDGE | 1 GAL | 15" o.c. |
| DA | 60 | DIARRHENA AMERICANA | AMERICAN BEAKGRAIN | 1 GAL | 12" o.c. |
| HC | 226 | HYPERICUM CALYCINUM | CREEPING ST. JOHN`S WORT | 1 GAL | 18" o.c. |
| IL | 57 | ITEA VIRGINICA `LITTLE HENRY` TM | LITTLE HENRY SWEETSPIRE | 2 GAL | 24" o.c. |
| LM | 698 | LIRIOPE MUSCARI `BIG BLUE` | BIG BLUE LILYTURF | 4" POT | 12" o.c. |
| PT | 193 | PACHYSANDRA TERMINALIS | JAPANESE PACHYSANDRA | 1 GAL | 12" o.c. |
| VC | 530 | VINCA MINOR | COMMON PERIWINKLE | 1 GAL | 12" o.c. |

## PLANTING PLAN GENERAL NOTES

1. DO NOT SCALE DRAWINGS.
2. COORDINATE ALL WORK WITH OTHER DESIGN DISCIPLINES.
3. COORDINATE ALL WORK WITH SPECIFICATIONS.
4. PRESERVE AND PROTECT ALL EXISTING SITE IMPROVEMENTS INDICATED TO REMAIN FROM DAMAGE DURING CONSTRUCTION.

## PLANTING PLAN KEYNOTES

| SYMBOL | EDGINGS DESCRIPTION | DETAIL |
|---|---|---|
| E-01 | EDGING, STEEL EDGING RESTRAINT, TYP. | 12/L002 |

| SYMBOL | PLANTING DESCRIPTION | DETAIL |
|---|---|---|
| PL-01 | DECORATIVE AGGREGATE STRIP, TYP.; MIN. 2' -0' WIDTH | 12/L002 |
| PL-02 | SPADE EDGE | 7/L002 |
| PL-03 | PLANTING AREA; MULCH WITH MIN. 3" ORGANIC MULCH | |
| PL-04 | TURFGRASS | |
| PL-05 | REINFORCED TURFGRASS, INVISIBLE STRUCTURES GRASSPAVE2 | 6/L605 |
| PL-06 | EXISTING TREE TO REMAIN | |

0' 5' 10' 20'

N

1 Earlham College Science Complex - Phase 2
Site Planting Plan
L141
1"=10'-0"


boora

Boora Architects Inc.
720 SW Washington Suite 800
Portland, OR 97205
T. 503.226.1575 F. 503.241.7429
www.boora.com

BROWNING DAY MULLINS DIERDORF LANDSCAPE ARCHITECTS
Browning Day Mullins Dierdorf, Inc.
Architecture
Landscape Architecture
Planning
626 North Illinois Street
Indianapolis, Indiana 46204
P: 317.635.5030
F: 317.634.5409
E: www.bdmd.com


JONATHAN D. HUTSLAR REGISTERED No. LA20500154 STATE OF INDIANA LANDSCAPE ARCHITECT

Earlham College Science Complex
Phase 2
801 National Road West
Richmond, IN 47374-4095

| MARK | DATE | DESCRIPTION |
|---|---|---|

| | |
|---|---|
| Issued: | FEBRUARY 28, 2014 |
| Scale: | 1" = 10'-0" |
| Drawn By: | BAS |
| Reviewed By: | JDH |
| File: | L-100_Overall Plans.dwg |

Copyright

CONFORMED SET

SITE PLANTING PLAN

L141

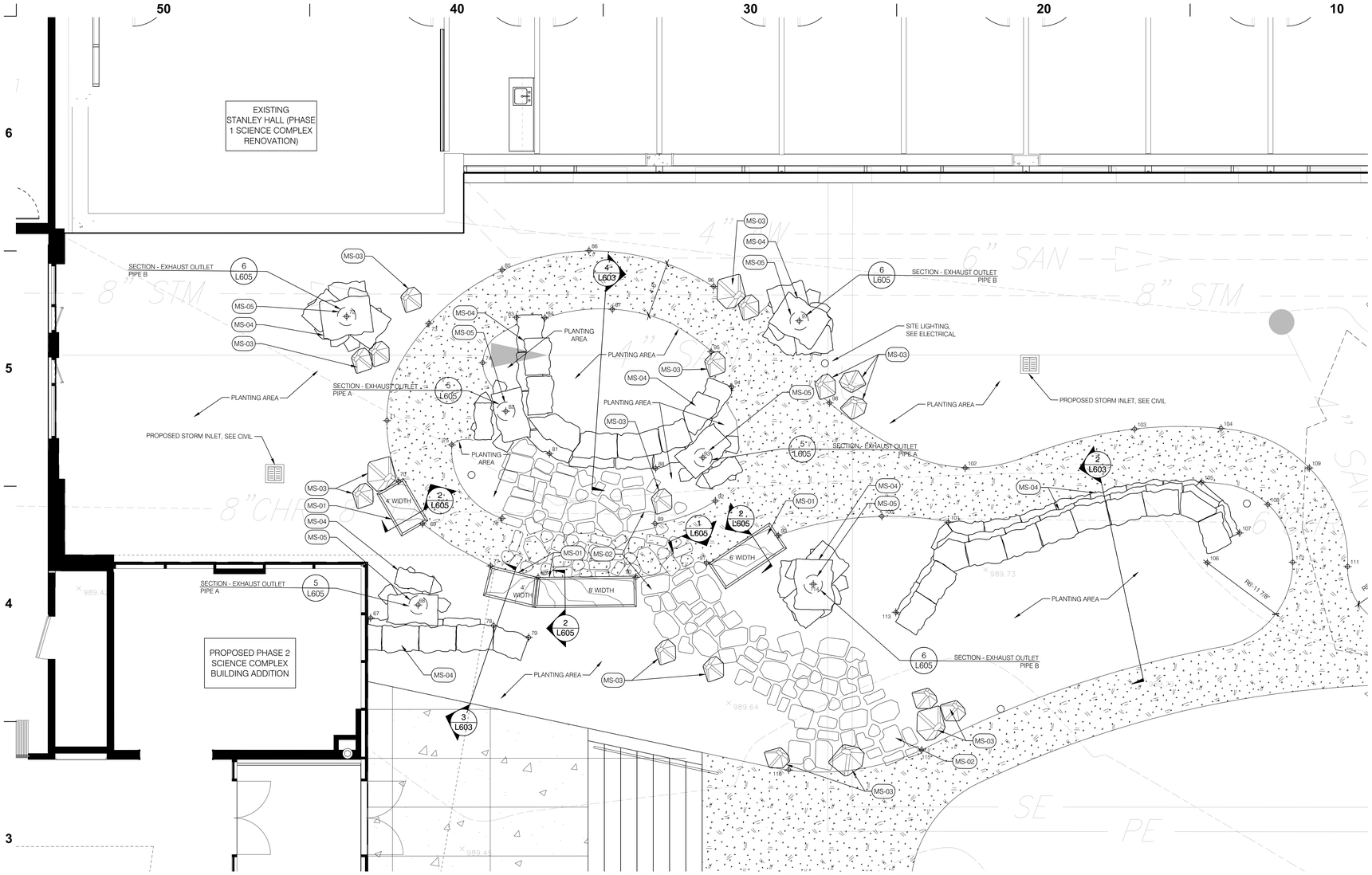


## 2 Earlham College Science Complex - Phase 2
## Site Plan Enlargement - Cretaceous Garden

L411 1/4"=1'-0"

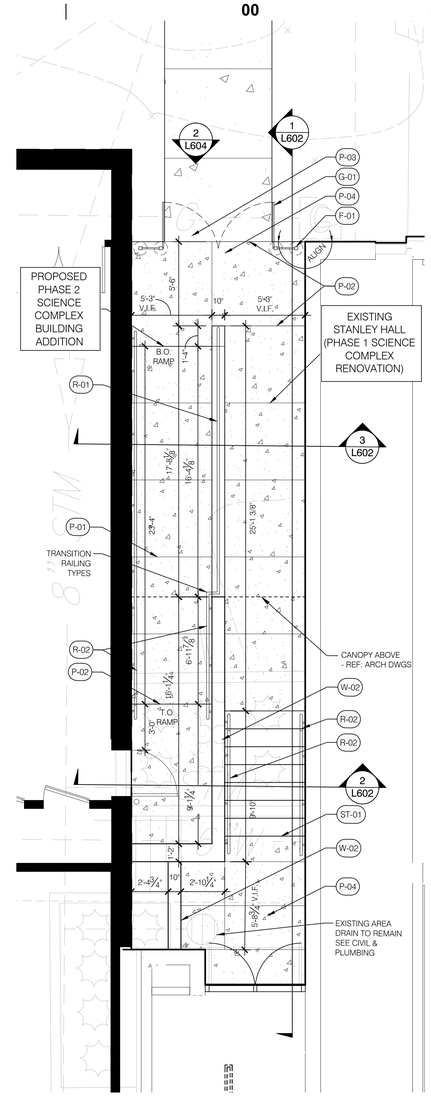


## 1 Earlham College Science Complex - Phase 2
## Site Plan Enlargement - North Egress

L411 1/4"=1'-0"

### NORTHING/EASTING POINT SCHEDULE

| POINT | NORTHING | EASTING | POINT | NORTHING | EASTING |
|---|---|---|---|---|---|
| 67 | N 1667721.45431 | E 539863.44531 | 92 | N 1667731.30384 | E 539891.55291 |
| 68 | N 1667722.54898 | E 539867.32208 | 93 | N 1667734.83630 | E 539890.50337 |
| 69 | N 1667729.19665 | E 539867.61655 | 94 | N 1667740.64632 | E 539892.80476 |
| 70 | N 1667732.66640 | E 539865.62518 | 95 | N 1667743.51020 | E 539891.08362 |
| 71 | N 1667737.61654 | E 539864.62837 | 96 | N 1667748.85594 | E 539891.24859 |
| 72 | N 1667746.10301 | E 539861.24043 | 97 | N 1667746.10821 | E 539898.26753 |
| 73 | N 1667745.60271 | E 539867.98183 | 98 | N 1667739.41733 | E 539900.81703 |
| 74 | N 1667742.42693 | E 539872.41966 | 99 | N 1667728.52272 | E 539896.72044 |
| 75 | N 1667735.68316 | E 539869.95014 | 100 | N 1667730.18540 | E 539905.18503 |
| 76 | N 1667729.71226 | E 539874.11783 | 101 | N 1667729.73692 | E 539910.61607 |
| 77 | N 1667725.80881 | E 539873.21888 | 102 | N 1667734.20205 | E 539911.96105 |
| 78 | N 1667720.92367 | E 539873.50396 | 103 | N 1667737.51547 | E 539925.80065 |
| 79 | N 1667719.97778 | E 539876.39346 | 104 | N 1667737.64337 | E 539932.85947 |
| 80 | N 1667724.89718 | E 539877.11362 | 105 | N 1667733.22964 | E 539931.32649 |
| 81 | N 1667735.03847 | E 539877.94537 | 106 | N 1667726.63517 | E 539931.84114 |
| 82 | N 1667738.47248 | E 539874.33948 | 107 | N 1667729.10538 | E 539934.46001 |
| 83 | N 1667746.16701 | E 539875.12243 | 108 | N 1667731.45631 | E 539936.74985 |
| 84 | N 1667746.14774 | E 539877.46270 | 109 | N 1667734.48051 | E 539940.10907 |
| 85 | N 1667750.03522 | E 539873.92286 | 110 | N 1667726.30344 | E 539948.32362 |
| 86 | N 1667751.68367 | E 539881.01611 | 111 | N 1667726.44190 | E 539943.32554 |
| 87 | N 1667746.90132 | E 539882.97706 | 112 | N 1667726.74318 | E 539938.82971 |
| 88 | N 1667733.91270 | E 539886.64854 | 113 | N 1667722.33086 | E 539906.39981 |
| 89 | N 1667729.40745 | E 539886.62743 | 114 | N 1667724.56808 | E 539899.62558 |
| 90 | N 1667724.98473 | E 539885.11374 | 115 | N 1667711.08818 | E 539908.62297 |
| 91 | N 1667726.21426 | E 539890.88859 | 116 | N 1667709.35090 | E 539897.77237 |

### SITE PLAN GENERAL NOTES

1. DO NOT SCALE DRAWINGS.
2. COORDINATE ALL WORK WITH OTHER DESIGN DISCIPLINES.
3. COORDINATE ALL WORK WITH SPECIFICATIONS.
4. PRESERVE AND PROTECT ALL EXISTING SITE IMPROVEMENTS INDICATED TO REMAIN FROM DAMAGE DURING CONSTRUCTION.

### SITE PLAN KEYNOTES

| SYMBOL | CURB DESCRIPTION | DETAIL |
|---|---|---|
| C-01 | CURB, CONCRETE, EARLHAM STANDARD CURB AND GUTTER | 7/L003 |

| SYMBOL | CURB RAMP DESCRIPTION | DETAIL |
|---|---|---|
| CR-01 | CURB RAMP, TYPE A | 2/L005 |
| CR-02 | CURB RAMP, TYPE C | 3/L005 |

| SYMBOL | EDGINGS DESCRIPTION | DETAIL |
|---|---|---|
| E-01 | EDGING, STEEL EDGING RESTRAINT, TYP. | 12/L002 |

| SYMBOL | FENCE DESCRIPTION | DETAIL |
|---|---|---|
| F-01 | DECORATIVE METAL FENCE | 2/L604 |

| SYMBOL | GATE DESCRIPTION | DETAIL |
|---|---|---|
| G-01 | METAL GATE WITH PANIC HARDWARE | 2/L604 |

| SYMBOL | MISC DESCRIPTION | DETAIL |
|---|---|---|
| MS-01 | STONE SLAB BENCH | 2/L605 |
| MS-02 | STEP STONE, TYP. | 1/L605 |
| MS-03 | ROCK BOULDER | |
| MS-04 | OUTCROPPING STONE, HALQUIST STONE, LANNON OUTCROPPING, 5-12" THICKNESS X VARIABLE LENGTH ( CONTRACTOR TO FIT TO SIZE AS REQUIRED) | |
| MS-05 | EXHAUST PIPE OUTLET, SEE CIVIL & MECHANICAL | |

| SYMBOL | PAVING DESCRIPTION | DETAIL |
|---|---|---|
| P-01 | PAVEMENT, CONTROL JOINT, TYP. | 6/L003 |
| P-02 | PAVEMENT, EXPANSION JOINT, TYP. | 6/L003 |
| P-03 | PAVEMENT, 4" CONCRETE | 1/L003 |
| P-04 | PAVEMENT, 5" CONCRETE, | 2/L003 |
| P-05 | PAVEMENT, 6" HEAVY DUTY CONCRETE | 3/L003 |
| P-06 | PAVEMENT, DECOMPOSED GRANITE; KAFKA GRANITE, 1/4" MINUS, IMPERIAL GRAY GRANITE | 8/L003 |
| P-07 | PAVEMENT, ASPHALT PATCH; SEE CIVIL FOR UTILITY LINE LOCATIONS | |
| P-08 | PAVEMENT, EXISTING CONCRETE TO REMAIN | |

| SYMBOL | RAIL DESCRIPTION | DETAIL |
|---|---|---|
| R-01 | RAILING, GRADE-MOUNTED, STAINLESS STEEL HANDRAIL SEE SHEET L004 FOR RAILING DETAILS | |
| R-02 | RAILING, WALL-MOUNTED, STAINLESS STEEL HANDRAIL SEE SHEET L004 FOR RAILING DETAILS | |

| SYMBOL | SITE FURNISHINGS DESCRIPTION | DETAIL |
|---|---|---|
| SF-01 | BIKE RACK, FORMS + SURFACES; BIKE GARDEN BIKE RACK, CONFIGURATION B | |

| SYMBOL | STAIRWAYS DESCRIPTION | DETAIL |
|---|---|---|
| ST-01 | STAIRS, ARCHITECTURAL CONCRETE STAIRS | |
| ST-02 | STAIRWAY RUNNEL | 10/L004 |

| SYMBOL | WALL DESCRIPTION | DETAIL |
|---|---|---|
| W-01 | WALL, ARCHITECTURAL CONCRETE RETAINING WALL WITH PLANTER | |
| W-02 | WALL, ARCHITECTURAL CONCRETE RETAINING WALL | |


boora

Boora Architects Inc.
720 SW Washington Suite 800
Portland, OR 97205
T. 503.226.1575 F. 503.241.7429
www.boora.com

BROWNING DAY MULLINS DIERDORF LANDSCAPE ARCHITECTS

Browning Day Mullins Dierdorf, Inc.
Architecture
Landscape Architecture
Planning

626 North Illinois Street
Indianapolis, Indiana 46204
P: 317.635.5030
F: 317.634.5409
E: www.bdmd.com


JONATHAN D. HUTSAR REGISTERED No. LA20500154 STATE OF INDIANA LANDSCAPE ARCHITECT

# Earlham College Science Complex Phase 2

801 National Road West
Richmond, IN 47374-4095

| MARK | DATE | DESCRIPTION |
|---|---|---|
| 1 | 01.15.2014 | ADDENDUM 2 |

Issued: FEBRUARY 28, 2014
Scale: As Noted
Drawn By: BAS
Reviewed By: JDH
File: L-400_Plan Enlargements.dwg

Copyright

CONFORMED SET

PLAN ENLARGEMENTS

L411

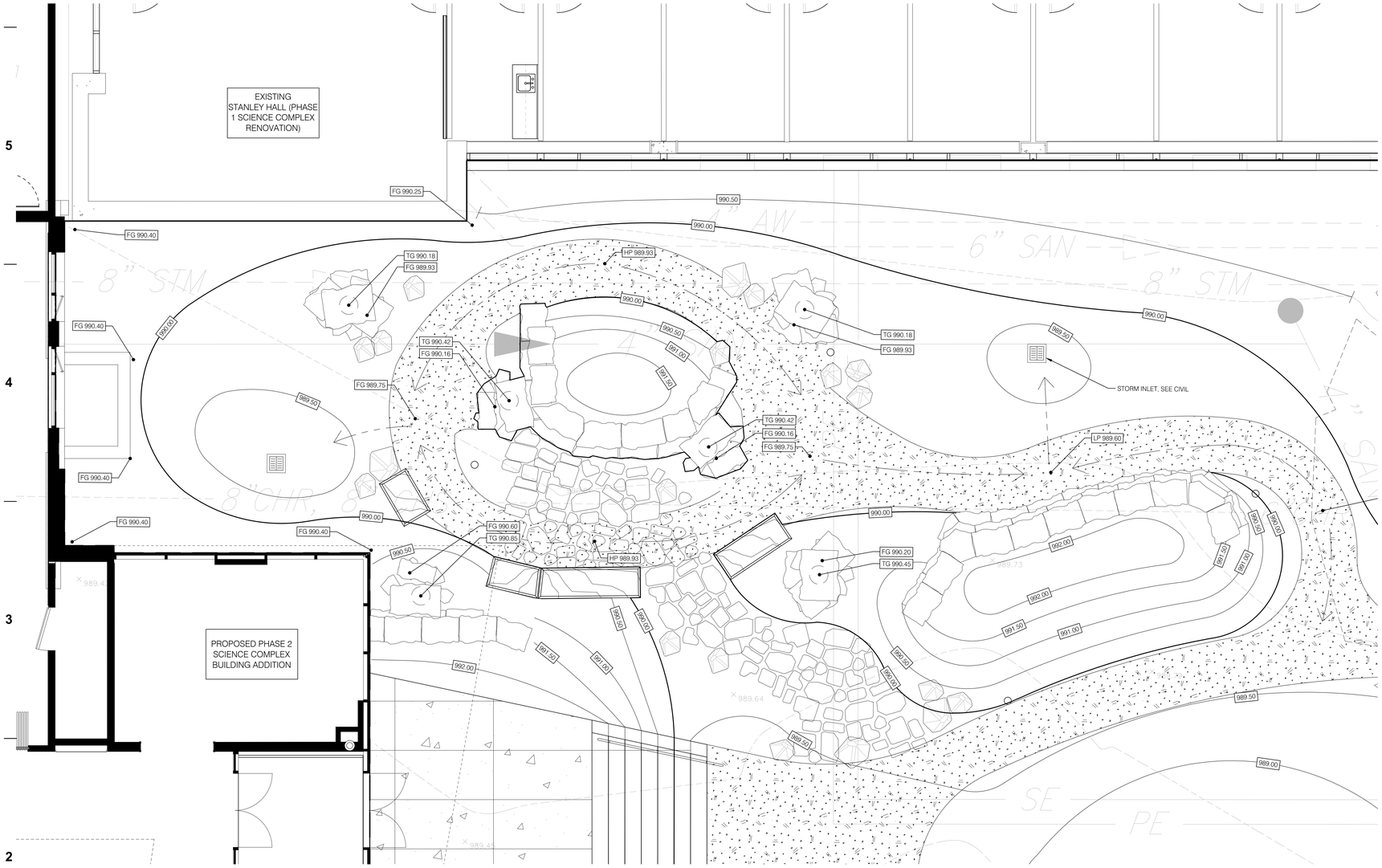


**2** Earlham College Science Complex - Phase 2
## Grading Plan Enlargement - Cretaceous Garden
L431 1/4"=1'-0"

0' 2' 4' 8'

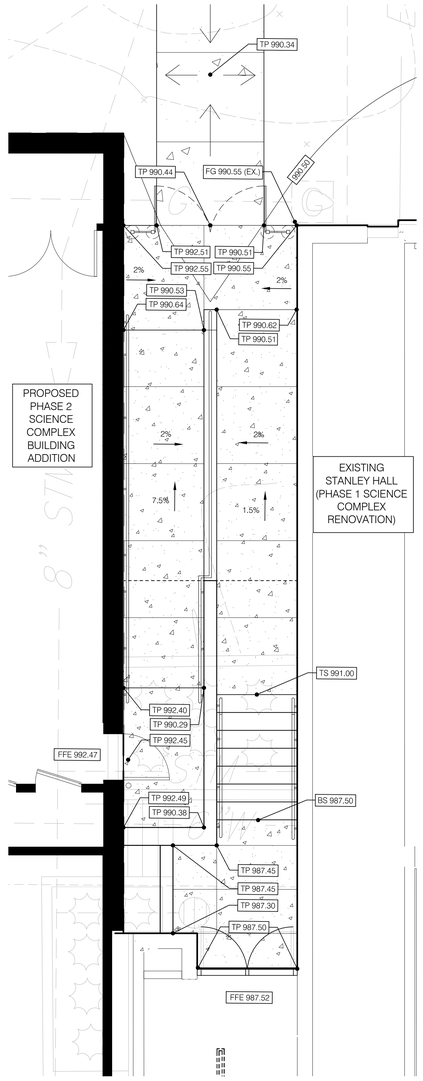


**1** Earlham College Science Complex - Phase 2
## Grading Plan Enlargement - North Egress
L431 1/4"=1'-0"

0' 2' 4' 8'

### GRADING PLAN KEYNOTES

| | |
|---|---|
| TP | TOP OF PAVEMENT |
| TS | TOP OF STEP |
| BS | BOTTOM OF STEP |
| TW | TOP OF WALL |
| BW | BOTTOM OF WALL |
| FG | FINISH GRADE |
| TG | TOP OF GRATE (FOR EXHAUST OUTLET, SEE DETAILS) |
| FFE | FINISH FLOOR ELEVATION |
| MEG | MATCH EXISTING GRADE |

### GRADING PLAN GENERAL NOTES

1. DO NOT SCALE DRAWINGS.
2. COORDINATE ALL WORK WITH OTHER DESIGN DISCIPLINES.
3. COORDINATE ALL WORK WITH SPECIFICATIONS.
4. PRESERVE AND PROTECT ALL EXISTING SITE IMPROVEMENTS INDICATED TO REMAIN FROM DAMAGE DURING CONSTRUCTION.


boora

Boora Architects Inc.
720 SW Washington Suite 800
Portland, OR 97205
T. 503.226.1575 F. 503.241.7429
www.boora.com

BROWNING DAY MULLINS DIERDORF LANDSCAPE ARCHITECTS

Browning Day Mullins Dierdorf, Inc.
Architecture
Landscape Architecture
Planning

626 North Illinois Street
Indianapolis, Indiana 46204
P: 317.635.5030
F: 317.634.5409
E: www.bdmd.com


JONATHAN D. HUTSAR REGISTERED No. LA20500154 STATE OF INDIANA LANDSCAPE ARCHITECT

# Earlham College Science Complex Phase 2

801 National Road West
Richmond, IN 47374-4095

| MARK | DATE | DESCRIPTION |
|---|---|---|

| | |
|---|---|
| Issued: | FEBRUARY 28, 2014 |
| Scale: | As Noted |
| Drawn By: | BAS |
| Reviewed By: | JDH |
| File: | L-400_Plan Enlargements.dwg |

Copyright

CONFORMED SET

PLAN ENLARGEMENTS

L431

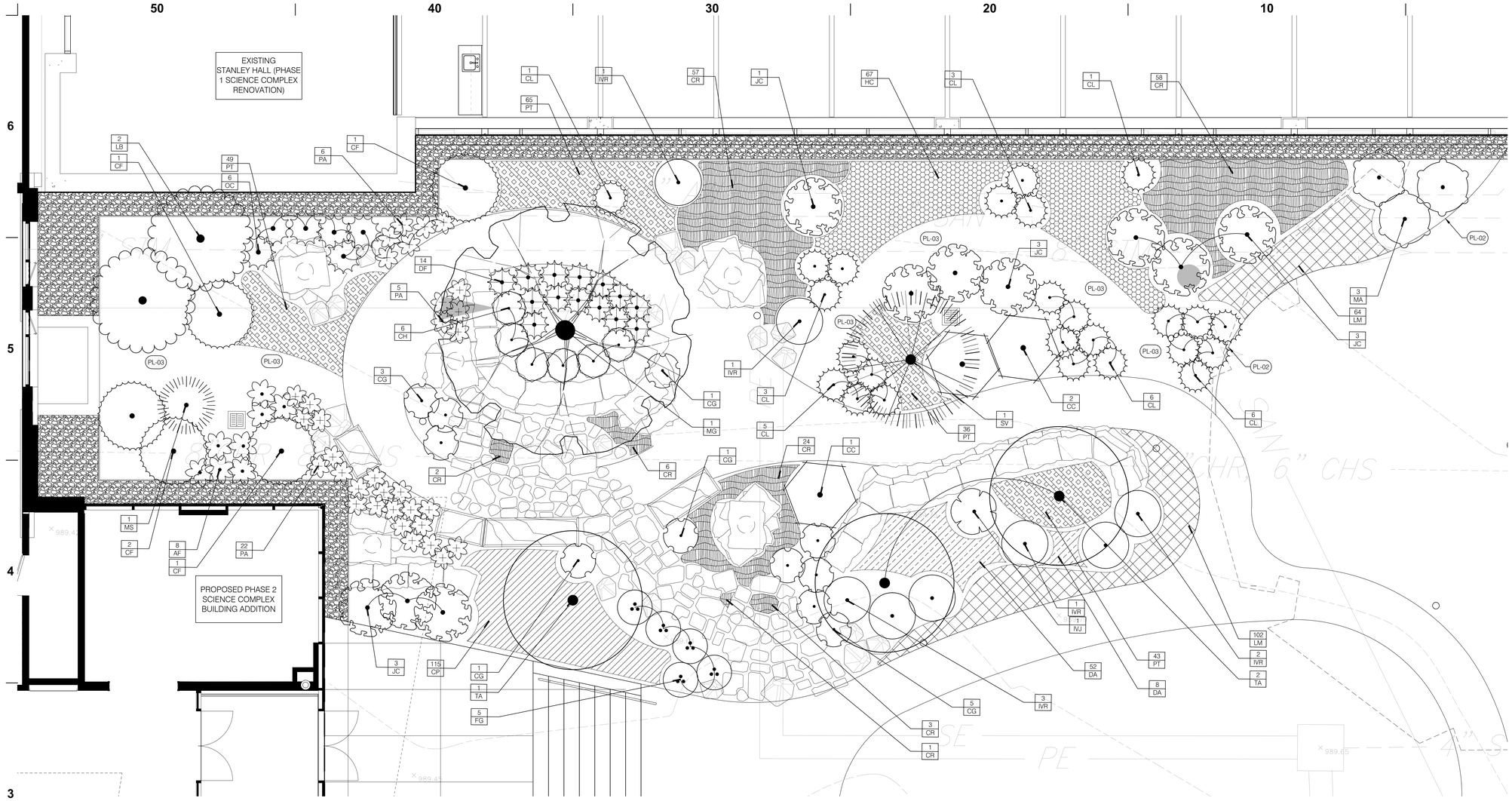


# 01 Earlham College Science Complex - Phase 2
## Planting Plan Enlargement - Cretaceous Garden

L411 1/4"=1'-0'

0' 2' 4' 8'

N

## PLANT SCHEDULE

| TREES | QTY | BOTANICAL NAME | COMMON NAME | CONT | CAL | HEIGHT |
|---|---|---|---|---|---|---|
| CCR | 3 | CERCIS CANADENSIS | EASTERN REDBUD | B & B | 4"CAL | |
| CK | 3 | CLADRASTIS KENTUKEA | AMERICAN YELLOWWOOD | B & B | 4"CAL | |
| MG | 1 | METASEQUOIA GLYPTOSTROBOIDES | DAWN REDWOOD | B & B | 4"CAL | |
| SV | 1 | SCIADOPITYS VERTICILLATA | UMBRELLA PINE | B & B | | 7-8` |
| TA | 3 | TROCHODENDRON ARALIOIDES | WHEEL TREE | B & B | 4"CAL | |

| SHRUBS | QTY | BOTANICAL NAME | COMMON NAME | CONT | HEIGHT |
|---|---|---|---|---|---|
| AF | 8 | ATHYRIUM FILIX-FEMINA | COMMON LADY FERN | 1 GAL | |
| CC | 3 | CALYCANTHUS FLORIDUS | CAROLINA ALLSPICE | 5 GAL | |
| CG | 11 | CAREX GRAYI | BURR SEDGE | 1 GAL | |
| CA | 29 | CEANOTHUS AMERICANUS | NEW JERSEY TEA | 3 GAL | |
| CF | 5 | CEPHALOTAXUS HARRINGTONIA | JAPANESE PLUM YEW | 7 GAL | |
| CH | 6 | CEPHALOTAXUS HARRINGTONIA `DUKE`S GARDEN` | DUKE`S GARDEN PLUM YEW | 3 GAL | |
| CL | 25 | CHASMANTHIUM LATIFOLIUM | NORTHERN SEA OATS | 1 GAL | |
| DF | 14 | DRYOPTERIS FILIX-MAS | MALE FERN | 1 GAL | |
| FG | 31 | FOTHERGILLA GARDENII | DWARF FOTHERGILLA | 3 GAL | |
| IVJ | 1 | ILEX VERTICILLATA `JIM DANDY` | JIM DANDY WINTERBERRY | 3 GAL | |
| IVR | 8 | ILEX VERTICILLATA `RED SPRITE` | RED SPRITE WINTERBERRY | 3 GAL | |
| JC | 10 | JUNIPERUS CHINENSIS `SEA GREEN` | SEA GREEN JUNIPER | 3 GAL | |
| JCB | 111 | JUNIPERUS CONFERTA `BLUE PACIFIC` | BLUE PACIFIC JUNIPER | 3 GAL | |
| LB | 2 | LINDERA BENZOIN | SPICEBUSH | 7 GAL | |
| MA | 3 | MAHONIA AQUIFOLIUM | OREGON GRAPE | 3 GAL | |
| MS | 1 | MATTEUCCIA STRUTHIOPTERIS | OSTRICH FERN | 1 GAL | |
| OC | 6 | OSMUNDA CINNAMOMEA | CINNAMON FERN | 1 GAL | |
| PA | 33 | POLYSTICHUM ACROSTICHOIDES | CHRISTMAS FERN | 1 GAL | |
| TE | 37 | TAXUS X MEDIA `EVERLOW` | EVERLOW YEW | B & B | 12' HT. |

| GROUND COVERS | QTY | BOTANICAL NAME | COMMON NAME | CONT | SPACING |
|---|---|---|---|---|---|
| CP | 115 | CAREX PENSYLVANICA | PENNSYLVANIA SEDGE | 1 GAL | 12" o.c. |
| CR | 151 | CAREX RADIATA | STRAIGHT STYLE WOOD SEDGE | 1 GAL | 15" o.c. |
| DA | 60 | DIARRHENA AMERICANA | AMERICAN BEAKGRAIN | 1 GAL | 12" o.c. |
| HC | 226 | HYPERICUM CALYCINUM | CREEPING ST. JOHN`S WORT | 1 GAL | 18" o.c. |
| IL | 57 | ITEA VIRGINICA `LITTLE HENRY` TM | LITTLE HENRY SWEETSPIRE | 2 GAL | 24" o.c. |
| LM | 698 | LIRIOPE MUSCARI `BIG BLUE` | BIG BLUE LILYTURF | 4" POT | 12" o.c. |
| PT | 193 | PACHYSANDRA TERMINALIS | JAPANESE PACHYSANDRA | 1 GAL | 12" o.c. |
| VC | 530 | VINCA MINOR | COMMON PERIWINKLE | 1 GAL | 12" o.c. |

## PLANTING PLAN GENERAL NOTES

1. DO NOT SCALE DRAWINGS.
2. COORDINATE ALL WORK WITH OTHER DESIGN DISCIPLINES.
3. COORDINATE ALL WORK WITH SPECIFICATIONS.
4. PRESERVE AND PROTECT ALL EXISTING SITE IMPROVEMENTS INDICATED TO REMAIN FROM DAMAGE DURING CONSTRUCTION.

## PLANTING PLAN KEYNOTES

| EDGINGS SYMBOL | DESCRIPTION | DETAIL |
|---|---|---|
| E-01 | EDGING, STEEL EDGING RESTRAINT, TYP. | 12/L002 |

| PLANTING SYMBOL | DESCRIPTION | DETAIL |
|---|---|---|
| PL-01 | DECORATIVE AGGREGATE STRIP, TYP.; MIN. 2`-0" WIDTH | 12/L002 |
| PL-02 | SPADE EDGE | 7/L002 |
| PL-03 | PLANTING AREA; MULCH WITH MIN. 3" ORGANIC MULCH | |
| PL-04 | TURFGRASS | |
| PL-05 | REINFORCED TURFGRASS, INVISIBLE STRUCTURES GRASSPAVE2 | 6/L605 |
| PL-06 | EXISTING TREE TO REMAIN | |


boora

Boora Architects Inc.
720 SW Washington Suite 800
Portland, OR 97205
T. 503.226.1575 F. 503.241.7429
www.boora.com

BROWNING DAY MULLINS DIERDORF LANDSCAPE ARCHITECTS

Browning Day Mullins Dierdorf, Inc.
Architecture
Landscape Architecture
Planning

626 North Illinois Street
Indianapolis, Indiana 46204
P: 317.635.5030
F: 317.634.5409
E: www.bdmd.com


JONATHAN D. HUTSAR REGISTERED No. LA20500154 STATE OF INDIANA LANDSCAPE ARCHITECT

Earlham College Science Complex
Phase 2

801 National Road West
Richmond, IN 47374-4095

| MARK | DATE | DESCRIPTION |
|---|---|---|

| | |
|---|---|
| Issued: | FEBRUARY 28, 2014 |
| Scale: | As Noted |
| Drawn By: | BAS |
| Reviewed By: | JDH |
| File: | L-400_Plan Enlargements.dwg |

Copyright

CONFORMED SET

PLAN ENLARGEMENTS

L441

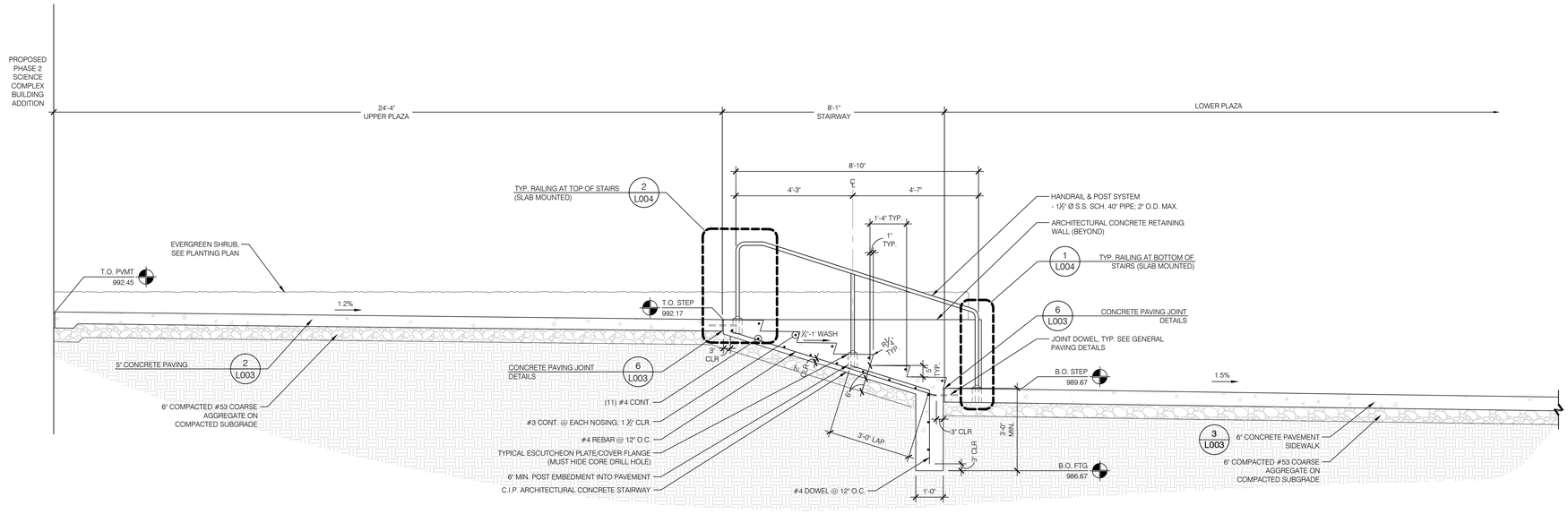


## 2 SECTION - STAIRS @ PHASE 2 SCIENCE COMPLEX ENTRY

L601 1/2" = 1'-0"

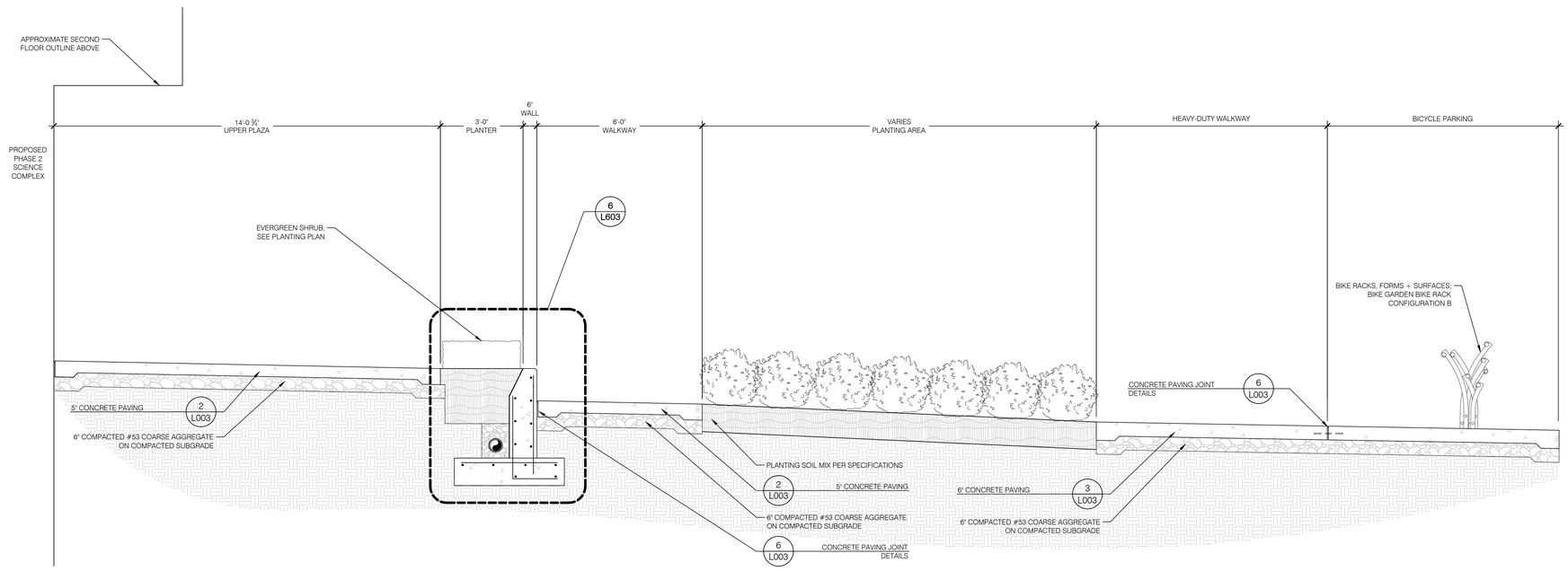


## 1 SECTION - UPPER & LOWER WALKS & RAMP

L601 1/2" = 1'-0"


boora

Boora Architects Inc.
720 SW Washington Suite 800
Portland, OR 97205
T. 503.226.1575 F. 503.241.7429
www.boora.com

BROWNING DAY MULLINS DIERDORF LANDSCAPE ARCHITECTS

Browning Day Mullins Dierdorf, Inc.
Architecture
Landscape Architecture
Planning

626 North Illinois Street
Indianapolis, Indiana 46204
P: 317.635.5030
F: 317.634.5409
E: www.bdmd.com


JONATHAN D. HUTSAR REGISTERED No. LA20500154 STATE OF INDIANA LANDSCAPE ARCHITECT

# Earlham College Science Complex Phase 2

801 National Road West
Richmond, IN 47374-4095

| MARK | DATE | DESCRIPTION |
|---|---|---|

| | |
|---|---|
| Issued: | FEBRUARY 28, 2014 |
| Scale: | As Noted |
| Drawn By: | BAS |
| Reviewed By: | JDH |
| File: | L-600_Sections.dwg |

Copyright

CONFORMED SET

SITE SECTIONS

L601

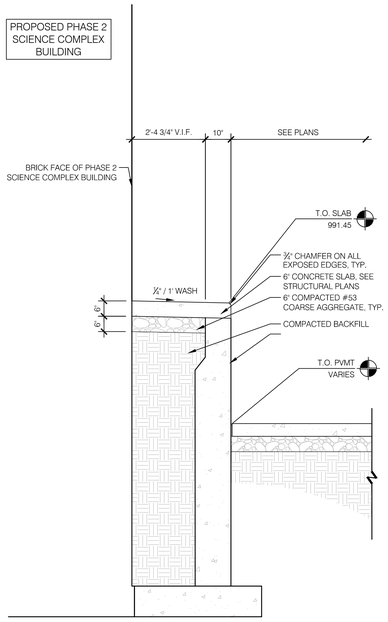


**4** SECTION - PHASE1/PHASE 2 JUNCTION @ CONC. SLAB
L602 1/2" = 1'-0"

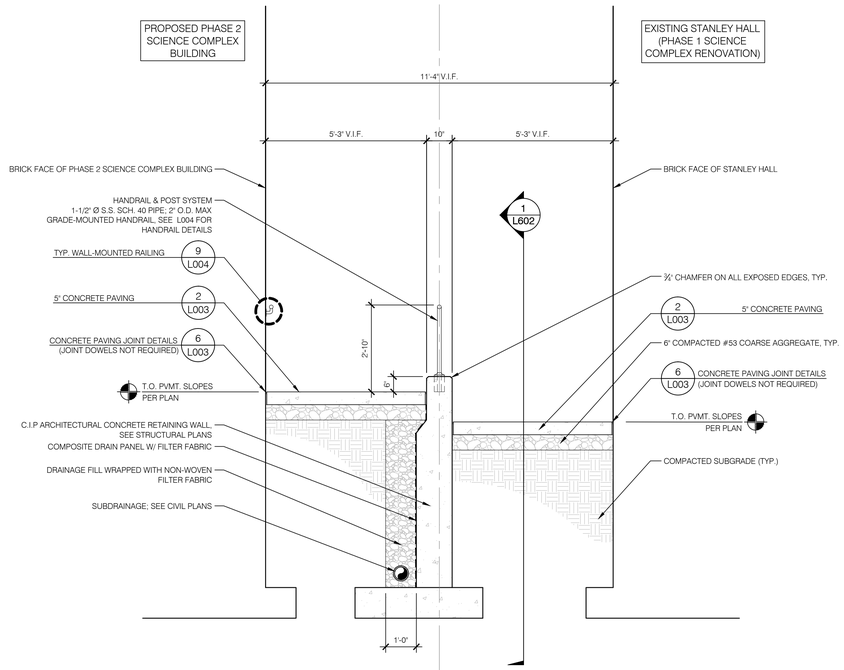


**3** SECTION - PHASE1/PHASE 2 JUNCTION
L602 1/2" = 1'-0"

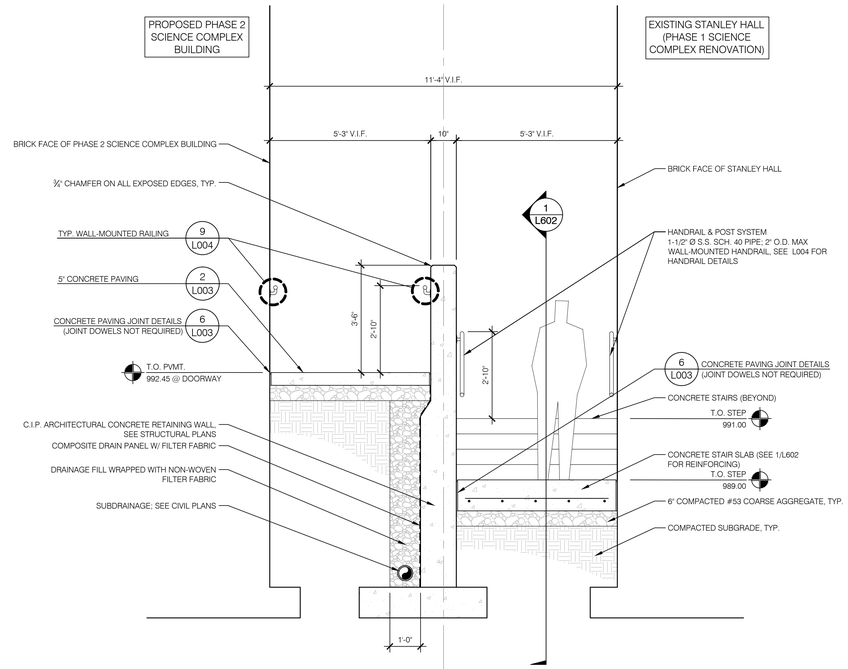


**2** SECTION - PHASE1/PHASE 2 JUNCTION
L602 1/2" = 1'-0"

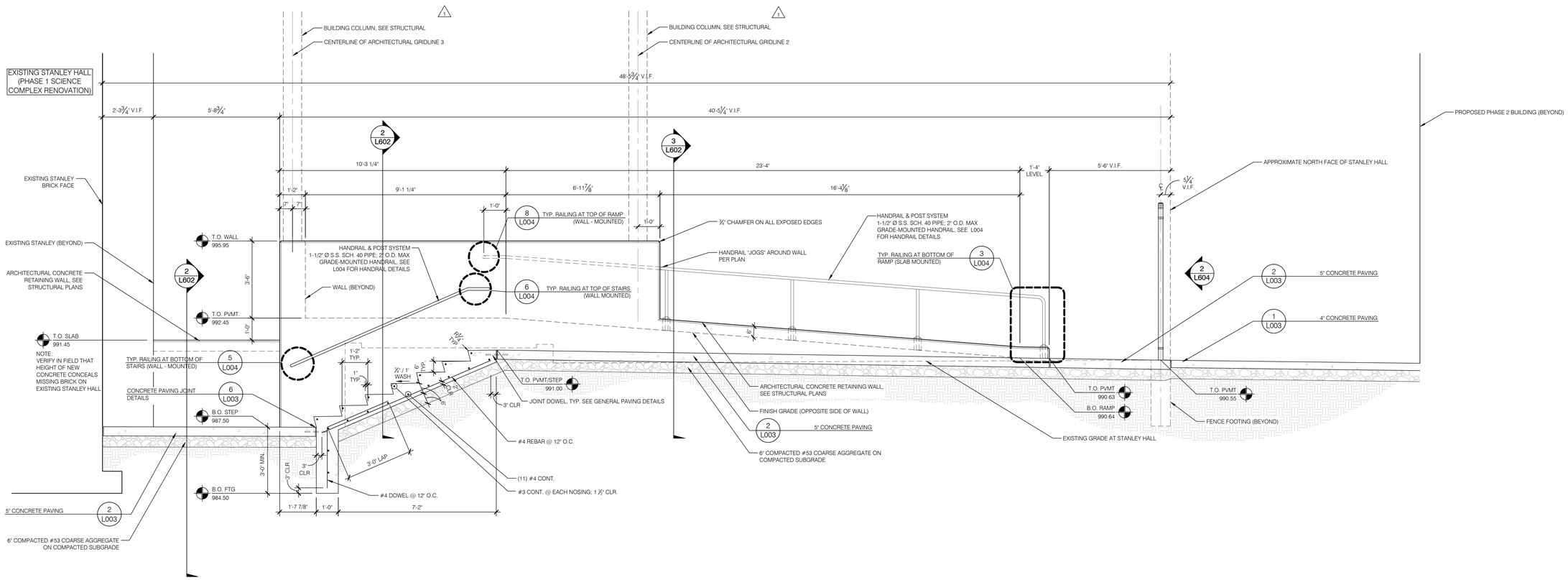


**1** SECTION - PHASE 1/PHASE 2 JUNCTION
L602 1/2" = 1'-0"


boora

Boora Architects Inc.
720 SW Washington Suite 800
Portland, OR 97205
T. 503.226.1575 F. 503.241.7429
www.boora.com

BROWNING DAY MULLINS DIERDORF LANDSCAPE ARCHITECTS

Browning Day Mullins Dierdorf, Inc.
Architecture
Landscape Architecture
Planning

626 North Illinois Street
Indianapolis, Indiana 46204
P: 317.635.5030
F: 317.634.5409
E: www.bdmd.com


JONATHAN D. HUTSAR REGISTERED No. LA20500154 STATE OF INDIANA LANDSCAPE ARCHITECT

Earlham College Science Complex
Phase 2
801 National Road West
Richmond, IN 47374-4095

| MARK | DATE | DESCRIPTION |
|---|---|---|
| 1 | 01.15.2014 | ADDENDUM 2 |

| | |
|---|---|
| Issued: | FEBRUARY 28, 2014 |
| Scale: | As Noted |
| Drawn By: | BAS |
| Reviewed By: | JDH |
| File: | L-600_Sections.dwg |

Copyright

CONFORMED SET

SITE SECTIONS

L602

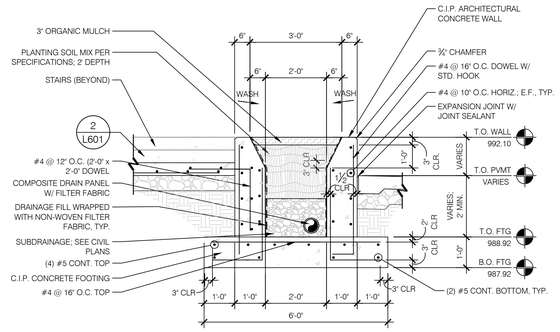


## 8 SECTION - CONC. RETAINING WALL

L603 1/2" = 1'-0"

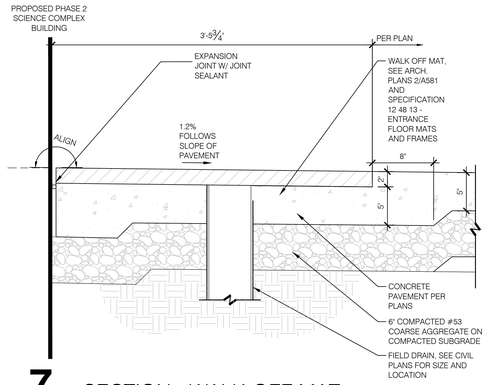


## 7 SECTION - WALK-OFF MAT

L603 1 1/2" = 1'-0"

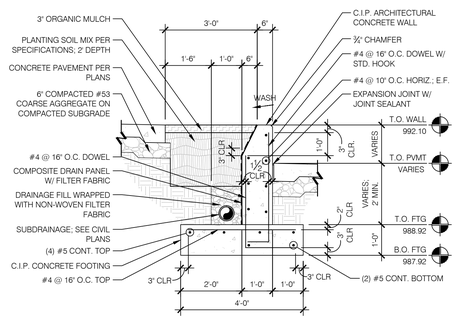


## 6 SECTION - CONC. RETAINING WALL

L603 1/2" = 1'-0"

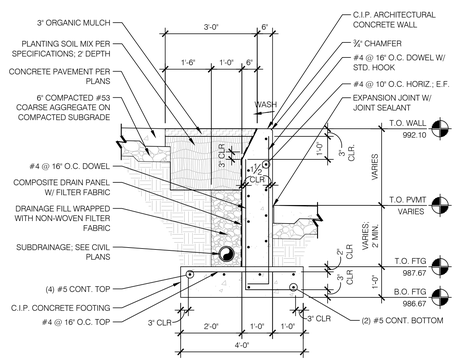


## 5 SECTION - CONC. RETAINING WALL

L603 1/2" = 1'-0"

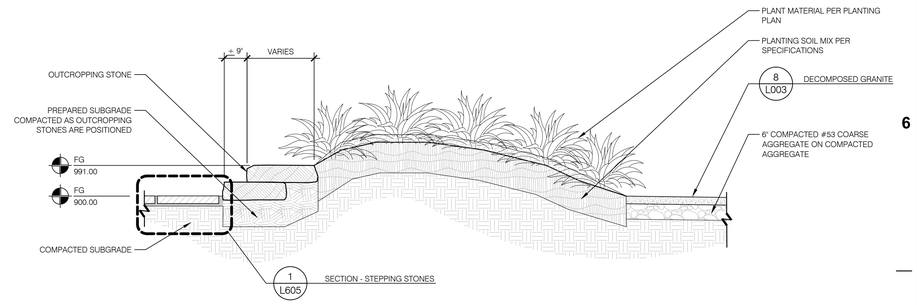


## 4 SECTION - OUTCROPPING WALL

L603 1/2" = 1'-0"

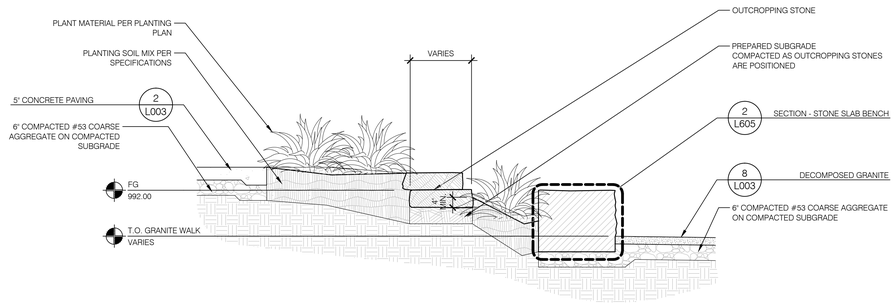


## 3 SECTION - OUTCROPPING WALL

L603 1/2" = 1'-0"

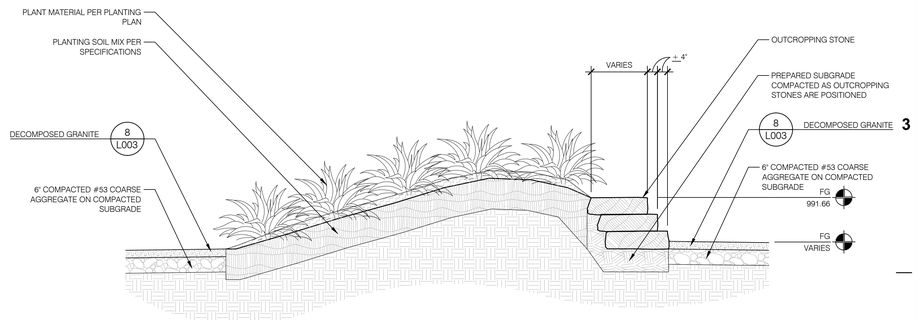


## 2 SECTION - OUTCROPPING WALL

L603 1/2" = 1'-0"

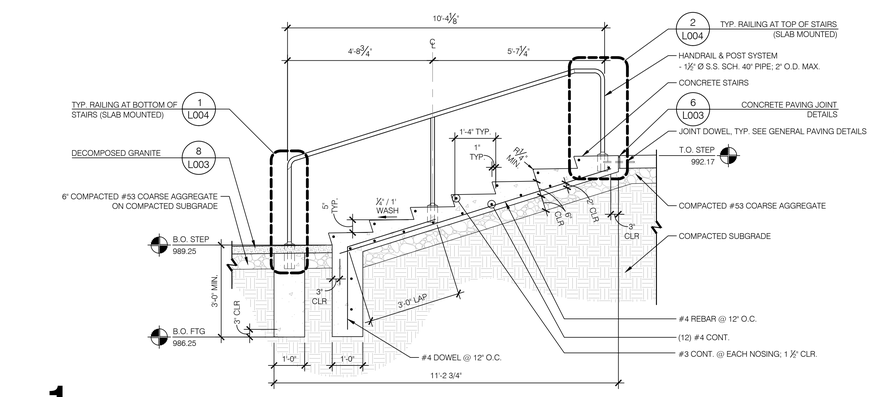


## 1 SECTION - STAIRS @ CRETACEOUS GARDEN

L603 1/2" = 1'-0"


boora

Boora Architects Inc.
720 SW Washington Suite 800
Portland, OR 97205
T. 503.226.1575 F. 503.241.7429
www.boora.com

BROWNING DAY MULLINS DIERDORF LANDSCAPE ARCHITECTS

Browning Day Mullins Dierdorf, Inc.
Architecture
Landscape Architecture
Planning

626 North Illinois Street
Indianapolis, Indiana 46204
P: 317.635.5030
F: 317.634.5409
E: www.bdmd.com


JONATHAN D. HUTSAR REGISTERED No. LA20500154 STATE OF INDIANA LANDSCAPE ARCHITECT

Earlham College Science Complex
Phase 2

801 National Road West
Richmond, IN 47374-4095

| MARK | DATE | DESCRIPTION |
|---|---|---|
| Issued: | | FEBRUARY 28, 2014 |
| Scale: | | As Noted |
| Drawn By: | | BAS |
| Reviewed By: | | JDH |
| File: | | L-600_Sections.dwg |

Copyright

CONFORMED SET

SITE SECTIONS

L603

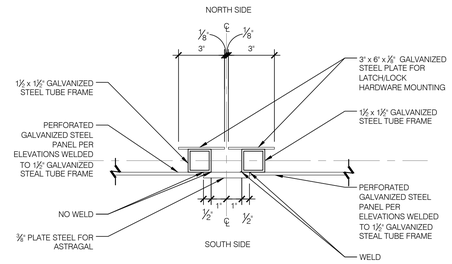


## 6 DETAIL - GATE HARDWARE

L604 3" = 1'-0"

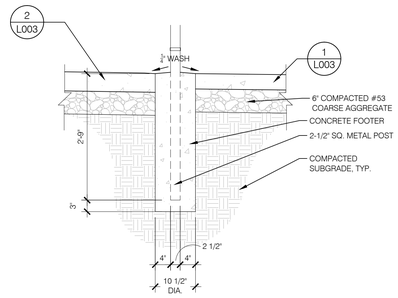


## 3 POST FOOTER @ FENCE

L604 3/4" = 1'-0"

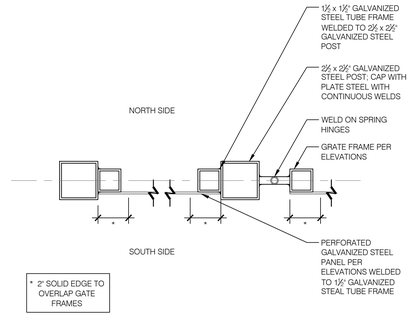


## 5 DETAIL - FENCE & GATE

L604 3" = 1'-0"

FENCE/GATE NOTES:

1. FENCE PANELS, GATE LEAFS AND POSTS ARE DESIGN/BUILD. FENCE/GATE MANUFACTURER SHALL BE RESPONSIBLE FOR FINAL STRUCTURAL DESIGN AS CERTIFIED BY A STRUCTURAL ENGINEER.
2. PREPARE ALL METAL FABRICATIONS PER SPECIFICATION SECTION 05 50 00 - METAL FABRICATIONS. SUBMIT SHOP DRAWINGS AS REQUIRED.
3. FINISH ALL METAL FABRICATIONS WITH HIGH PERFORMANCE COATING PER SPECIFICATION SECTION 09 90 00 - PAINTING AND COATING; COLOR = TO BE SELECTED BY ARCHITECT. SUBMIT PRODUCT DATA AND SAMPLES AS REQUIRED.
4. LIGHTNING-PROTECTION SYSTEM: PROVIDE A MAXIMUM GROUNDING-RESISTANCE VALUE OF 25 OHMS UNDER NORMAL DRY CONDITIONS. GROUND FENCE ON EACH SIDE OF GATE OPENING. BOND METAL GATES TO GATE POSTS. COMPLY WITH UL 467.
   - 4.1. GROUNDING METHOD: AT EACH GROUNDING LOCATION, DRIVE A GROUNDING ROD VERTICALLY UNTIL THE TOP IS 6" BELOW FINISH GRADE. CONNECT ROD TO FENCE WITH No. 6 AWG CONDUCTOR (BARE, SOLID WIRE FOR No. 6 AWG AND SMALLER; ALUMINUM ABOVE FINISH GRADE; COPPER ON AND BELOW FINISH GRADE). CONNECT TO EACH FENCE COMPONENT AT GROUNDING LOCATION.
   - 4.2. BONDING METHOD FOR GATES: CONNECT BONDING JUMPER BETWEEN GATE POST AND GATE FRAME. UTILIZE BRAIDED COPPER TAPE, 1" WIDE, WOVEN OF No. 30 AWG BARE COPPER WIRE, TERMINATED WITH COPPER FERRULES.
5. SWING GATES SHALL INCLUDE:
   - 5.1. SPRING HINGES: BHMA A156.17, GRADE 1, SUITABLE FOR EXTERIOR USE. FUNCTION: 320 - GATE SPRING PIVOT HINGE, ADJUSTABLE TENSION. MATERIAL: MALLEABLE IRON; GALVANIZED.
   - 5.2. EXIT HARDWARE: BHMA A156.3, GRADE 1, TYPE 1 (RIM EXIT DEVICE), WITH PUSH-PAD ACUTUATING BAR (PANIC BAR), SUITABLE FOR EXTERIOR USE. FUNCTION: 09 - ENTRANCE BY LEVER ONLY WHEN RELEASED BY KEY. KEY REMOVABLE ONLY WHEN LOCKED. MOUNTING CHANNEL: BENT-PLATE FORMED FROM 1/8" THICK STEEL PLATE. CHANNEL SPANS GATE FRAME. EXIT DEVICE IS MOUNTED ON CHANNEL WEB, RECESSED BETWEEN FLANGES, WITH FLANGES EXTENDING 1/8" BEYOND PUSH PAD SURFACE.
6. ALL METALS TO BE GALVANIZED PRIOR TO FINISHING UNLESS NOTED OTHERWISE.

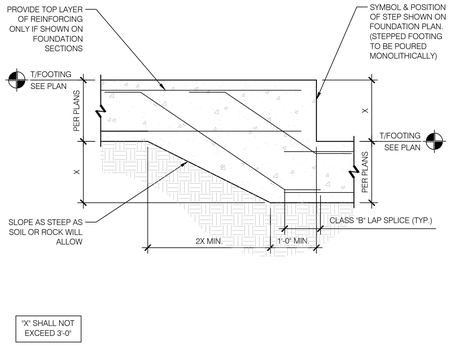


## 4 TYPICAL FOOTING STEP DETAIL

L604 1" = 1'-0"

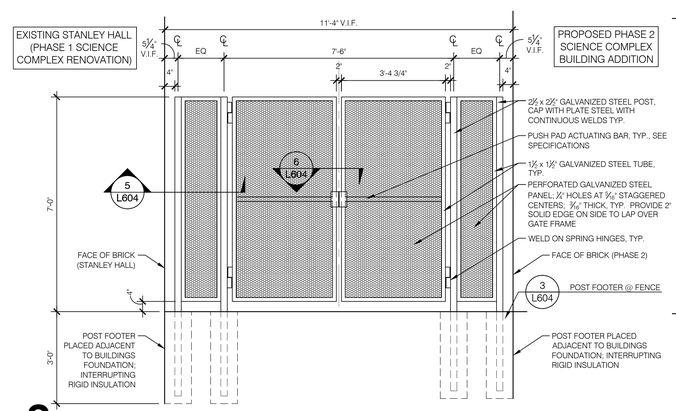


## 2 ELEVATION - FENCE & GATE AT PHASE 1 & 2 JUNCTION

L604 1/2" = 1'-0"

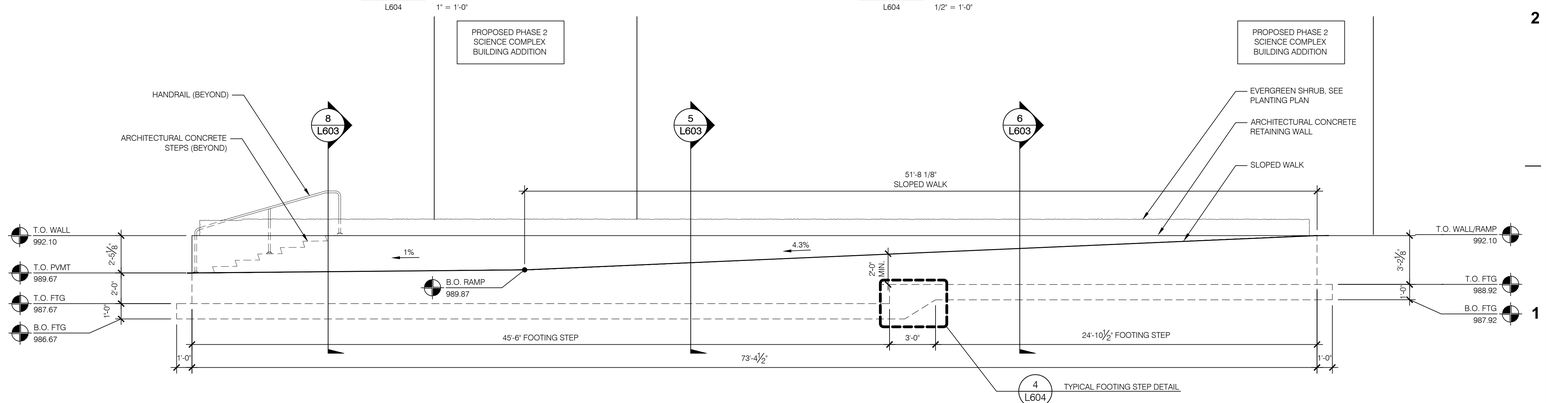


## 1 ELEVATION - ARCHITECTURAL CONCRETE WALL @ RAMP

L604 1/4" = 1'-0"


boora

**Boora Architects Inc.**
**720 SW Washington Suite 800**
**Portland, OR 97205**
**T. 503.226.1575 F. 503.241.7429**
**www.boora.com**

BROWNING DAY MULLINS DIERDORF LANDSCAPE ARCHITECTS

Browning Day Mullins Dierdorf, Inc.
Architecture
Landscape Architecture
Planning

626 North Illinois Street
Indianapolis, Indiana 46204
P: 317.635.5030
F: 317.634.5409
E: www.bdmd.com


JONATHAN D. HUTSAR REGISTERED No. LA20500154 STATE OF INDIANA LANDSCAPE ARCHITECT

Earlham College Science Complex
Phase 2
801 National Road West
Richmond, IN 47374-4095

| MARK | DATE | DESCRIPTION |
|---|---|---|
| 1 | 01.15.2014 | ADDENDUM 2 |

| | |
|---|---|
| Issued: | FEBRUARY 28, 2014 |
| Scale: | As Noted |
| Drawn By: | BAS |
| Reviewed By: | JDH |
| File: | L-600_Sections.dwg |

Copyright

CONFORMED SET

SITE ELEVATIONS

L604

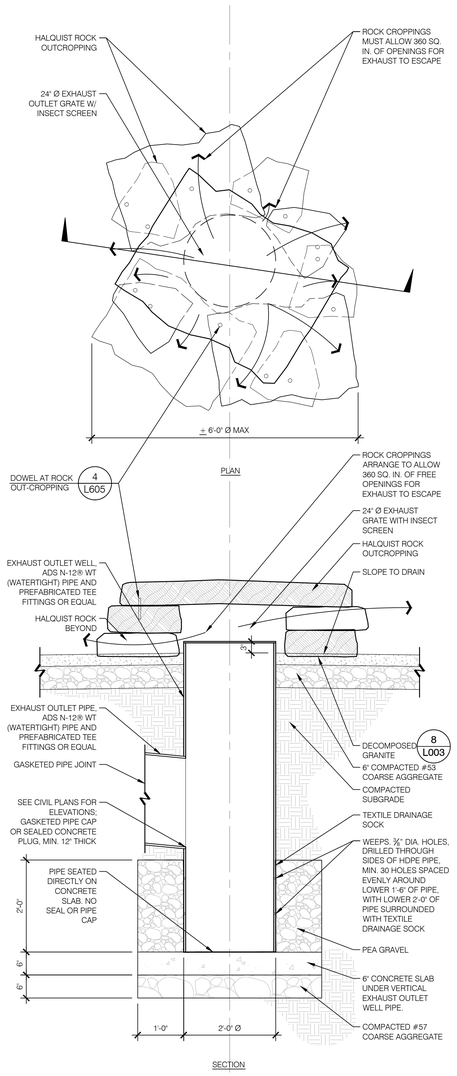


EXHAUST PIPE OUTLET TYPE B

NOTE: ARRANGE ROCK OUTCROPPINGS TO ALLOW 360 SQ. IN. OF FREE OPENINGS FOR AIR TO ESCAPE.

TYPE B IS FREESTANDING AND FOCUSES ON THE AIR OUT THE SIDES.

THERE MUST BE A PREINSTALLATION CONFERENCE WITH THE DESIGN TEAM AND A MOCKUP MUST BE MADE FOR REVIEW AND APPROVAL

## 6 SECTION - EXHAUST OUTLET PIPE B

L605 3/4" = 1'-0"

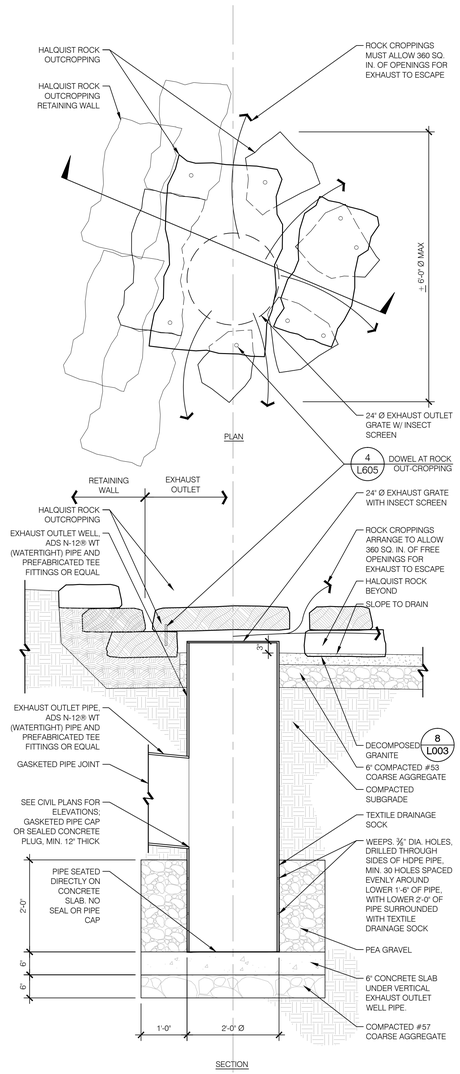


EXHAUST PIPE OUTLET TYPE A

NOTE: ARRANGE ROCK OUTCROPPINGS TO ALLOW 360 SQ. IN. OF FREE OPENINGS FOR AIR TO ESCAPE.

TYPE A IS INCORPORATED INTO A ROCK OUTCROPPING RETAINING WALL AND ALLOWS AIR TO ESCAPE THROUGH CREVASSES IN THE TOP AND SIDES OPPOSITE OF THE RETAINING WALL

THERE MUST BE A PREINSTALLATION CONFERENCE WITH THE DESIGN TEAM AND A MOCKUP MUST BE MADE FOR REVIEW AND APPROVAL

## 5 SECTION - EXHAUST OUTLET PIPE A

L605 3/4" = 1'-0"

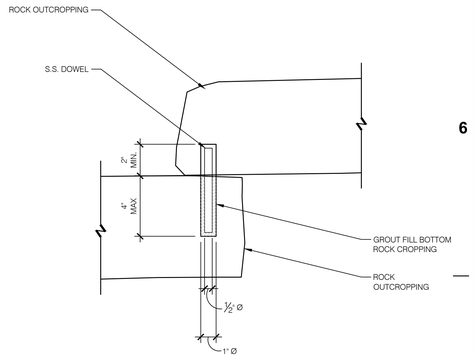


## 4 DOWEL AT ROCK OUT-CROPPING

L605 3" = 1'-0"




## 3 DETAIL - REINFORCED TURFGRASS

L605 NTS

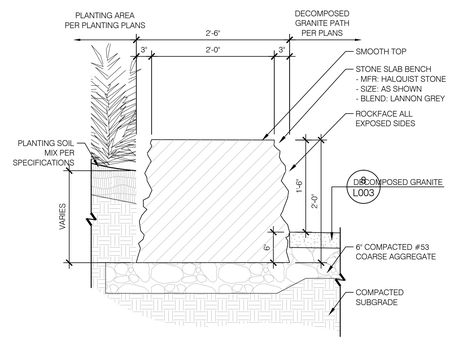


## 2 SECTION - STONE SLAB BENCH

L605 1" = 1'-0"

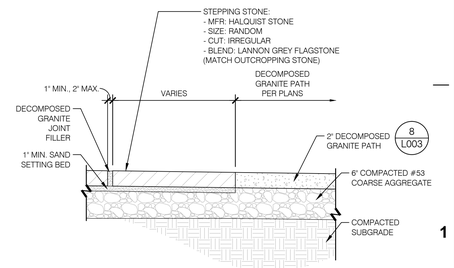


## 1 SECTION - STEPPING STONES

L605 1" = 1'-0"


boora

Boora Architects Inc.
720 SW Washington Suite 800
Portland, OR 97205
T. 503.226.1575 F. 503.241.7429
www.boora.com

BROWNING DAY MULLINS DIERDORF LANDSCAPE ARCHITECTS

Browning Day Mullins Dierdorf, Inc.
Architecture
Landscape Architecture
Planning

626 North Illinois Street
Indianapolis, Indiana 46204
P: 317.635.5030
F: 317.634.5409
E: www.bdmd.com


JONATHAN D. HUTSAR REGISTERED No. LA20500154 STATE OF INDIANA LANDSCAPE ARCHITECT

Earlham College Science Complex
Phase 2

801 National Road West
Richmond, IN 47374-4095

| MARK | DATE | DESCRIPTION |
|---|---|---|
| 1 | 01.15.2014 | ADDENDUM 2 |

| | |
|---|---|
| Issued: | FEBRUARY 28, 2014 |
| Scale: | As Noted |
| Drawn By: | BAS |
| Reviewed By: | JDH |
| File: | L-600_Sections.dwg |

Copyright

CONFORMED SET

SITE DETAILS

L605