SYMBOLS LIST

VENTILATION SYMBOLS

SINGLE LINE	DOUBLE LINE	DESCRIPTION
		NEW DUCTWORK - W x D AIRWAY DIMENSIONS
		DUCT SECTION - SUPPLY UP
		DUCT SECTION - SUPPLY DOWN
		DUCT SECTION - RETURN UP
		DUCT SECTION - RETURN DOWN
		DUCT SECTION - EXHAUST UP
		DUCT SECTION - EXHAUST DOWN
		EXISTING DUCT
		DUCT/EXISTING WORK TO BE REMOVED
R	R	INCLINED RISE WITH RESPECT TO AIRFLOW
D	D	INCLINED DROP WITH RESPECT TO AIRFLOW
		FLEXIBLE CONNECTION TO EQUIPMENT
		LOUVER & SCREEN WxD GROSS OPENING
		FLEXIBLE DUCT
		VOLUME DAMPER WITH QUADRANT LOCKING
M	M	MOTORIZED DAMPER
		SPLITTER DAMPER
BDD	BDD	BACKDRAFT DAMPER (GRAVITY)
FD	FD	FIRE DAMPER, SLEEVE & ACCESS DOOR
		AIR EXTRACTING VANES
		TURNING VANES, DOUBLE THICKNESS AIRFOIL TYPE
SYSTEM RISER NO.	SYSTEM RISER NO.	RISER MARK
T	T	THERMOSTAT (G) W/ GUARD
S	S	SENSOR
H	H	HUMIDISTAT
		CONNECTION TO EXISTING PIPING, DUCTWORK, ETC.
700-R 20x12	700-R 20x12	EXHAUST OR RETURN AIR REGISTER
800-S 20X12	800-S 20X12	ROUND CEILING SUPPLY DIFFUSER
800-S 20x12	800-S 20x12	RECTANGULAR CEILING SUPPLY DIFFUSER
800-S 20X12	800-S 20X12	SIDE WALL, SUPPLY REGISTER W/ VOLUME DAMPER
24x12 DG	24x12 DG	DOOR GRILLE W/ BUILT-IN FIRE DAMPER IF LOCATED ON A FIRE DOOR
		LINEAR DIFFUSER W/ BOOT. NO VOLUME DAMPER IN BOOT
		AIR VALVE
		TERMINAL UNIT, VARIABLE VOLUME INTEGRAL DIFFUSER
UC	UC	DOOR UNDERCUT MINIMUM 1"
		ROOF MOUNTED POWER OR GRAVITY VENTILATOR
		ROOF MOUNTED AIR INTAKE
		ELECTRIC DUCT HEATER

MECHANICAL SYMBOLS

SYMBOL	DESCRIPTION
	PRESSURE GAGE & COCK
	STRAINER
	STRAINER WITH BLOW OFF VALVE
	THERMOMETER
P/T	PRESSURE/TEMPERATURE SENSOR
	CAP
	UNION
	ANCHOR W/ ALIGNMENT GUIDES
	EXPANSION JOINT
	FLEXIBLE CONNECTION
	PRESSURE REDUCING VALVE
	RELIEF VALVE
	TRIPLE DUTY VALVE
	CHECK VALVE
	BALANCING VALVE
	GLOBE VALVE
	GATE VALVE
	BUTTERFLY WHEN VALVE IS 4" OR MORE, BALL VALVE WHEN VALUE IS 3" OR LESS
M	VALVE WITH MEMORY STOP
	GAS COCK
	CONTROL VALVE 2 WAY
	CONTROL VALVE 3 WAY
	CIRCUIT SETTER
BF	CODE BACKFLOW PREVENTER
	UNIT HEATER VERTICAL
	UNIT HEATER HORIZONTAL
	PIPE DOWN
	PIPE UP
	EXISTING PIPE TO BE REMOVED
	EXISTING PIPE TO REMAIN
	NEW PIPING
	PIPING ASSEMBLY (SEE DETAIL)
V	VENT
	FLOW CONTROL FITTING
FI	FLOW INDICATOR
FS	FLOW SWITCH
PS	PRESSURE SWITCH
	BASE MOUNTED PUMP (SEE DETAIL)
P	INLINE PUMP (SEE DETAIL)
	EQUIPMENT (SPECIFIED BY TAG BELOW)
TAG #	EQUIPMENT TAG W/ NUMBER
D	DRAIN LINE
G	GAS LINE
V	VENT LINE
HWS	HOT WATER SUPPLY
HWR	HOT WATER RETURN
CHWS	COLD WATER SUPPLY
CHWR	COLD WATER RETURN
SL	REFRIGERANT SUCTION LINE

CONTROL SYMBOLS

SYMBOL	DESCRIPTION
8	DIGITAL INPUT
8	ANALOG INPUT
8	DIGITAL OUTPUT
8	ANALOG INPUT
	CONTROL VALVE (ELECTRICAL)
	CONTROL VALVE (PNEUMATIC)
DPS	DIFFERENTIAL PRESSURE SWITCH
VSC	VARIABLE SPEED CONTROLLER
NO	NORMALLY OPEN
NC	NORMALLY CLOSED
ES	END SWITCH
	MOTOR OPERATED DAMPER
V	VELOCITY SENSOR
T	TEMPERATURE SENSOR
H	HUMIDITY SENSOR
DP	DIFFERENTIAL PRESSURE SENSOR
SD	SMOKE DETECTOR

ABBREVIATIONS

SYMBOL	DESCRIPTION	SYMBOL	DESCRIPTION
AC	AIR CONDITIONING UNIT	HP	HEAT PUMP
A.F.F.	ABOVE FINISHED FLOOR	H.P.	HORSEPOWER
A.F.G.	ABOVE FINISHED GRADE	MBH	THOUSAND BRITISH THERMAL UNITS
CAI	COMBUSTION AIR INTAKE	MFG.	MANUFACTURER
CAP.	CAPACITY	MTD.	MOUNTED
C.D.	CEILING DIFFUSER	NGMP	NATURAL GAS MEDIUM PRESSURE
CFH	CUBIC FEET PER HOUR	ORA	OUTSIDE RETURN AIR
C.F.M.	CUBIC FEET PER MINUTE	OSA	OUTSIDE SUPPLY AIR
CHWR	CHILLED WATER RETURN PIPE	PH.	PHASE
CHWS	CHILLED WATER SUPPLY PIPE	RA	RETURN AIR
CLG.	CEILING	RBD	ROUND BACKDRAFT DAMPER
CONN.	CONNECTION	R.P.M.	REVOLUTIONS PER MINUTE
CU	CONDENSING UNIT	SA	SUPPLY AIR
DN	DOWN	T-STAT	THERMOSTAT
EA	EXHAUST AIR	TG	TRANSFER GRILLE
EXP VLV	EXPANSION VALVE	TYP	TYPICAL
FD	FIRE DAMPER	V	VOLTS
GX-R	GEOEXCHANGE RETURN PIPE	VEL.	VELOCITY
GX-S	GEOEXCHANGE SUPPLY PIPE	W.C.	INCHES IN WATER COLUMN
HDPE	HIGH-DENSITY POLYETHYLENE		

GENERAL COORDINATION NOTES:

1. EACH TRADE CONTRACTOR SHALL VISIT CONSTRUCTION SITE PRIOR TO BIDDING, EXAMINE SCOPE AND CONDITIONS OF OTHER CONTRACT WORK, EXAMINE EXISTING CONDITIONS AND ALL INTERFERENCES AND REQUIRED COORDINATION IN ORDER TO INCLUDE EFFECT OF SAID CONDITIONS IN THEIR BID. BID DRAWINGS ARE DIAGRAMMATIC AND DO NOT INDICATE ALL REQUIRED RELOCATIONS, OFFSETS, CHANGE IN ASPECT RATIOS, OR ROUTING CHANGES REQUIRED TO INTEGRATE WORK WITH ALL OTHER CONDITIONS OR TRADES. WORK INSTALLED BEFORE COORDINATING SO AS TO CAUSE INTERFERENCES WITH OTHER TRADES SHALL BE REMOVED AND REWORKED WITHOUT COST TO OWNER. COST OF PROVIDING SUCH RELOCATIONS, OFFSETS, SIZE, CHANGES, REROUTING, ETC. SHALL BE INCLUDED IN BID. CODE CONFORMING SCALED (1/4") COORDINATED DRAWINGS SHALL BE PREPARED BY EACH TRADE TO FACILITATE AND VERIFY FIT AND CONGRUENCE OF THEIR INSTALLATION WITH OTHER TRADES.
2. WHERE ADDITIONAL DETAILS, DIAGRAMS, EQUIPMENT DATA, AND ISOMETRICS ARE REQUIRED BY BUILDING DEPARTMENT OR CODE AUTHORITIES FOR PERMIT OR APPROVAL, CONTRACTOR SHALL PROVIDE SAME AT NO ADDITIONAL COST.
3. THE CONTRACTOR SHALL REFER TO THE ARCHITECTURAL, STRUCTURAL, PLUMBING, FIRE PROTECTION, MECHANICAL AND ELECTRICAL DRAWINGS AND SPECIFICATIONS FOR COORDINATION AND EXTENT OF THE WORK OF THE VARIOUS TRADES AND IMPACT ON THEIR WORK.
4. WITH THE APPROVAL OF THE ARCHITECT AND WITHOUT ADDITIONAL COST TO THE OWNER, MAKE MODIFICATIONS IN THE WORK, INCLUDING REROUTING AS REQUIRED BY INTERFERENCE WITH STRUCTURAL, GENERAL AND WORK OF OTHER TRADES FOR PROPER EXECUTION OF THE WORK.
5. REFER TO THE ARCHITECTURAL DRAWINGS, FIELD CONDITIONS AND DETAILS FOR EXACT LOCATION OF PARTITIONS.
6. CUTTING AND PATCHING FOR THEIR WORK SHALL BE PERFORMED BY EACH TRADE CONTRACTOR UNLESS NOTED OTHERWISE.
7. REFER TO A0.04, FINISH SCHEDULE, NAC SHEETS FOR DUCT & PIPE PENETRATION REQUIREMENTS.

GENERAL MECHANICAL NOTES:

1. ALL WORK SHALL BE FURNISHED AND INSTALLED IN ACCORDANCE WITH CAMPUS STANDARDS AND ALL APPLICABLE CODES.
2. MEDIUM/LOW PRESSURE DUCTWORK SHALL BE CONSTRUCTED IN ACCORDANCE WITH THE LATEST SMACNA STANDARDS AT A MINIMUM.
3. PROVIDE MANUAL DAMPER ON ALL LOW PRESSURE SUPPLY BRANCH TAKE-OFF OF DUCTWORK.
4. ALL DUCT SIZES SHOWN SHALL BE CLEAR INSIDE DIMENSIONS.
5. DIFFUSERS, REGISTERS ARE AS SCHEDULED IN THE DRAWING. CONTRACTOR TO VERIFY AND COORDINATE WITH ARCHITECT TYPE OF CEILING TO DETERMINE FRAME TYPE.
6. BLANK-OFF WITH BLACK PAINTED PANEL WHERE SHOWN. DO NOT PAINT EXPOSED DUCTS OR REGISTERS.
7. PROVIDE UL APPROVED FIRE DAMPERS IN ALL DUCT PENETRATIONS THRU FIRE-RATED ASSEMBLIES WHETHER INDICATED OR NOT.
8. PROVIDE 1" THK. INTERNAL DUCT LINING IN FIRST 10' OF SUPPLY AIR & RETURN AIR DUCTWORK OF ALL HEAT PUMPS.
9. COORDINATE FLOOR DRAIN LOCATIONS WITH FINAL LOCATIONS OF HEAT PUMPS.
10. PROVIDE 1" INTERNAL LINING FOR A MINIMUM OF 3' FROM GRILLE/DIFFUSER IN ALL TRANSFER AIR DUCTWORK. PROVIDE 1" INTERNAL LINING IN ALL TRANSFER AIR ELBOWS.
11. DUCT LINING SHALL BE MIN 2LB DENSITY TEXTILE TYPE, TREATED TO PREVENT EROSION. LINING SHALL BE GLUED WITH 100% COVERAGE OF ADHESIVE AND PINNED TO DUCT ON 12" CENTERS IN BOTH DIRECTIONS AND WITHIN 3" OF EDGES. EDGES SHALL BE COATED WITH ADHESIVE AND BUTTED TOGETHER TIGHTLY SO THERE IS A STRAIGHT SURFACE WITH NO GAPS. PROTECT EXPOSED LEADING EDGES WITH SHEET METAL NOSING.
12. FLEXIBLE DUCTWORK: FINAL CONNECTIONS TO ALL BOOT ASSEMBLIES, DIFFUSERS AND REGISTERS SHALL BE MADE WITH CODE-APPROVED INSULATED FLEXIBLE DUCT, THERMAFLEX TYPE M-KE OR AS MANUFACTURED BY FLEXMASTER OR GENFLEX. FLEXIBLE DUCTWORK SHALL NOT BE USED IN DUCTWORK AS AN ELBOW. FLEXIBLE DUCTWORK SHALL BE STRAIGHT WITH ONLY MINOR OFFSETS NECESSARY FOR FIELD CONDITIONS. FLEXIBLE DUCTWORK IN LOW OR HIGH VELOCITY PORTIONS OF SUPPLY DUCT SYSTEMS SHALL BE TYPE 3 - INSULATED FLEXIBLE DUCT OR AS MANUFACTURED BY FLEXMASTER THERMOFLEX OR GENFLEX. FLEXIBLE DUCTWORK IN RETURN SYSTEMS SHALL BE INSULATED FLEXIBLE DUCT THERMAFLEX TYPE MK-E OR AS MANUFACTURED BY FLEXMASTER N145 THERMAFLEX OR GENFLEX. FLEXIBLE DUCTWORK SHALL NOT EXCEED 6'-0" IN LENGTH IN EITHER MEDIUM OR LOW VELOCITY SYSTEMS, SHALL BE PROPERLY SUPPORTED TO PREVENT KINKS OR SAGS, AND SHALL NOT BE USED AS AN ELBOW. CONNECTIONS SHALL BE SECURED WITH WRAPLOCK CLAMPS AND SEALED WITH DUCT SEALER. INSTALLATION SHALL BE IN ACCORDANCE WITH LOCAL CODES WHICH MAY RESTRICT TYPE, LENGTH AND USE OF FLEXIBLE DUCT.

boora

Boora Architects Inc.
720 SW Washington Suite 800
Portland, OR 97205
T. 503.226.1575 F. 503.241.7429
www.boora.com

dbHMS
design build engineering
303 W. Erie Street, Suite 510 Chicago, IL 60654
office: 312.915.0557
fax: 312.915.0558
website: www.dbhms.com

BENJAMIN RUBACH REGISTERED No. PE11100371 STATE OF INDIANA PROFESSIONAL ENGINEER

Earlham College Science Complex
Phase 2
801 National Road West
Richmond, IN 47374-4095

MARK	DATE	DESCRIPTION

Issued: February 28 , 2014
Scale: NTS

Copyright

CONFORMED SET

MECHANICAL ABBREVIATIONS, SYMBOLS & NOTES

M001

2/26/2014 1:46:13 PM

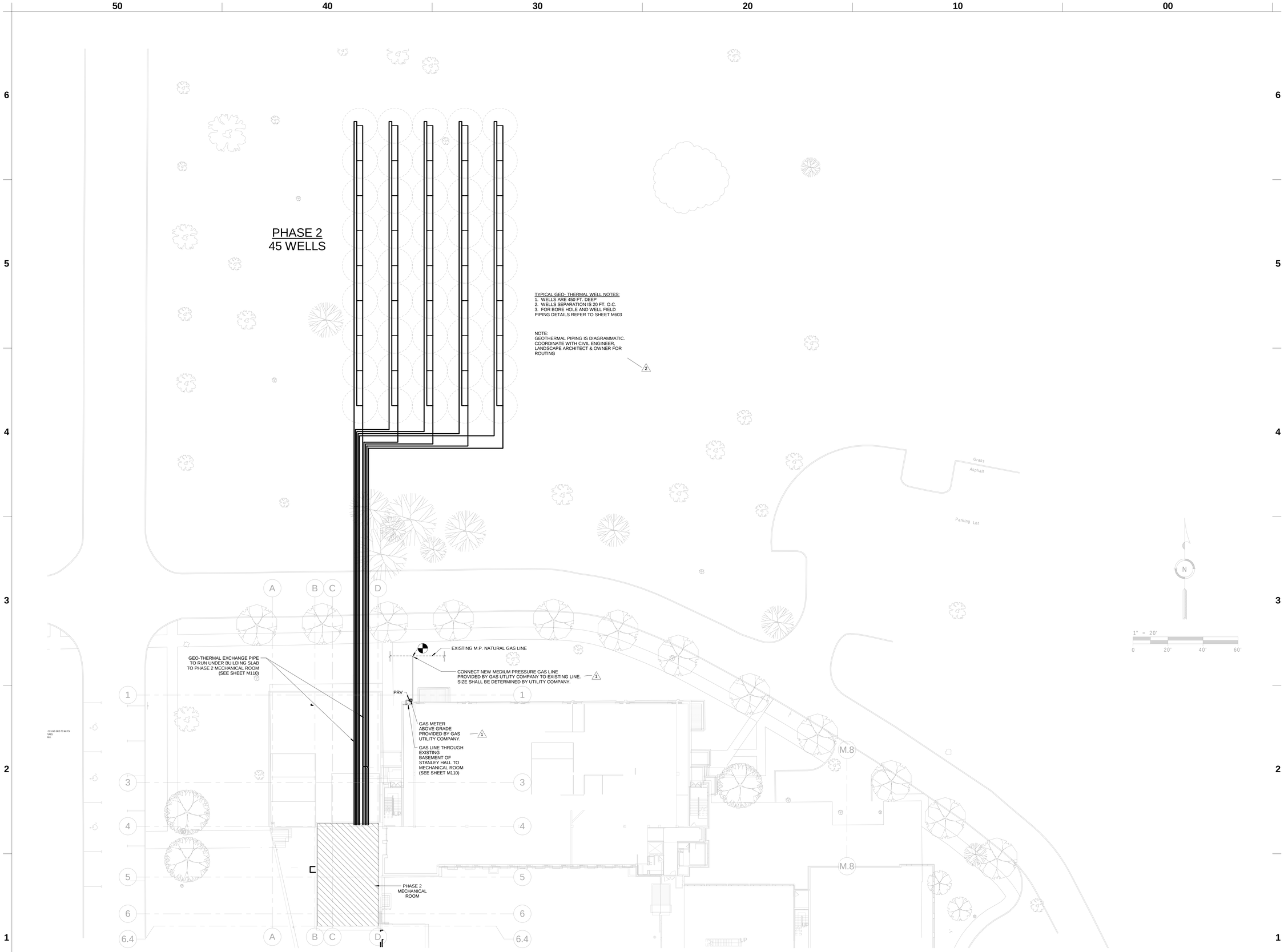

1 050 MECHANICAL SITE PLAN
1" = 20'-0"

2/26/2014 1:46:25 PM

boora

Boora Architects Inc.
720 SW Washington Suite 800
Portland, OR 97205
T. 503.226.1575 F. 503.241.7429
www.boora.com

dbHMS
design build engineering
303 W. Erie Street, Suite 510 Chicago, IL 60654
office: 312.915.0557
fax: 312.915.0558
website: www.dbhms.com

BENJAMIN RUBACH
REGISTERED
No. PE11100371
STATE OF
INDIANA
PROFESSIONAL ENGINEER

Earlham College Science Complex Phase 2

801 National Road West
Richmond, IN 47374-4095

MARK	DATE	DESCRIPTION
2	01.24.2014	Addendum 3
1	01.15.2014	Addendum 2

Issued: February 28 , 2014

Scale: 1" = 20'-0"

Copyright

CONFORMED SET

MECHANICAL SITE PLAN

M050

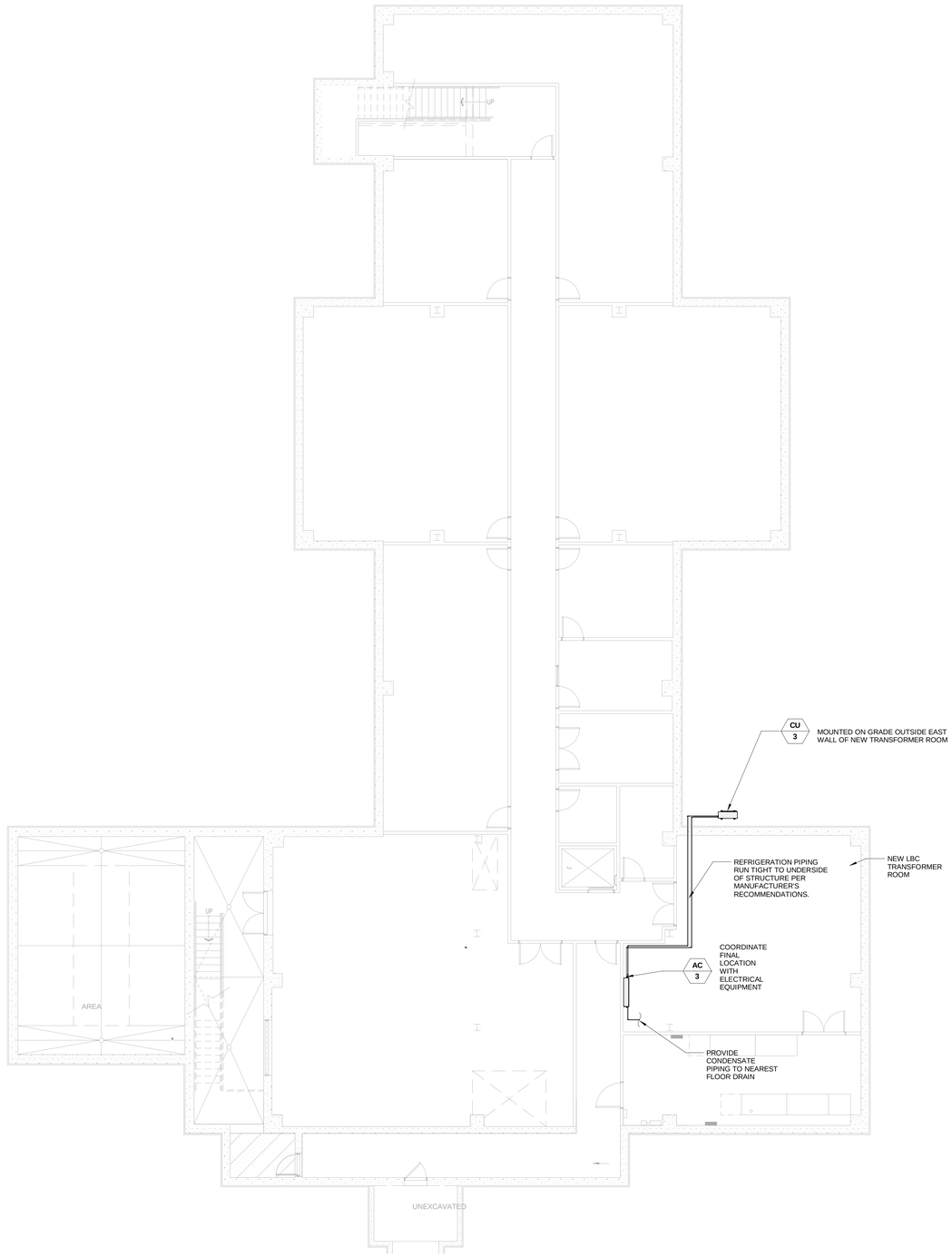

2 LANDRUM BOLLING CENTER- BASEMENT MECHANICAL PLAN
1/8" = 1'-0"

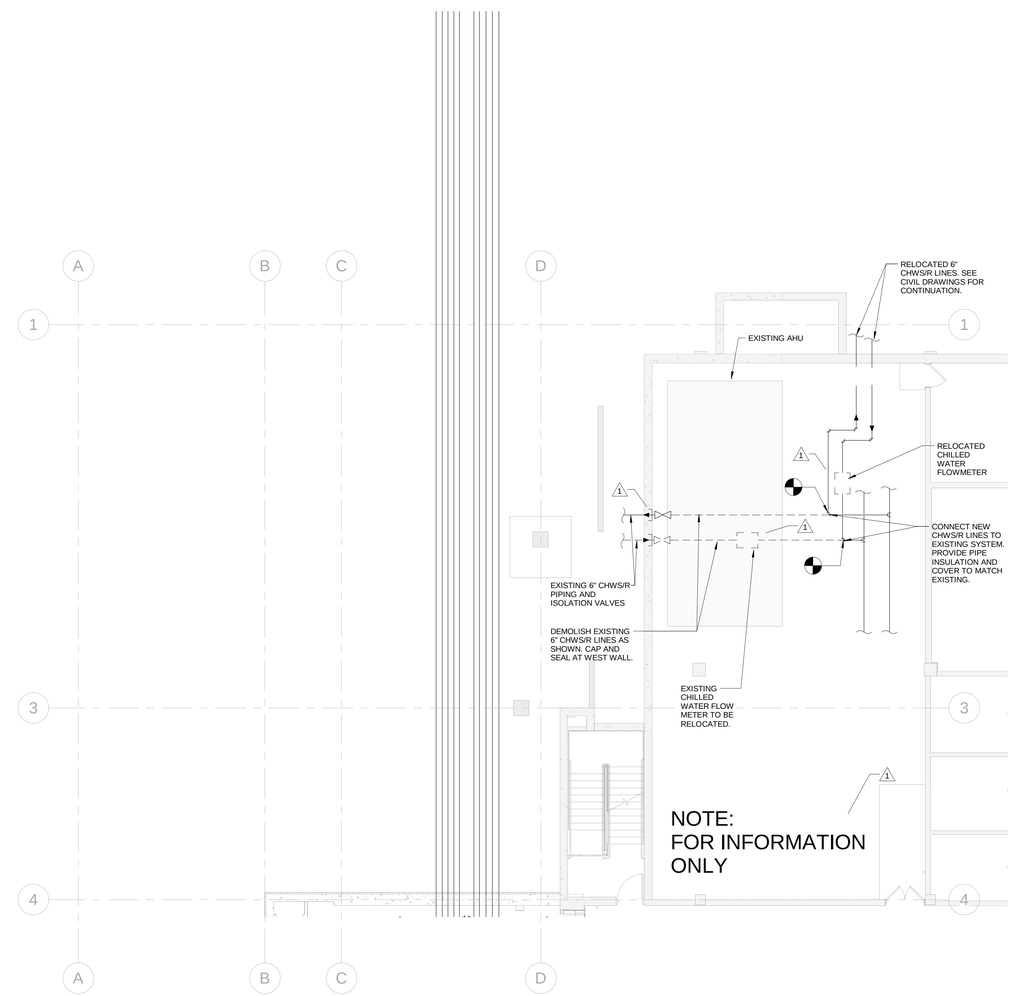

1 STANLEY BASEMENT
1/8" = 1'-0"

N

2/26/2014 1:46:33 PM

boora

Boora Architects Inc.
720 SW Washington Suite 800
Portland, OR 97205
T. 503.226.1575 F. 503.241.7429
www.boora.com

dbHMS
design build engineering
303 W. Erie Street, Suite 510 Chicago, IL 60654
office: 312.915.0557
fax: 312.915.0558
website: www.dbhms.com

BENJAMIN RUBACH REGISTERED No. PE11100371 STATE OF INDIANA PROFESSIONAL ENGINEER

Earlham College Science Complex Phase 2

801 National Road West
Richmond, IN 47374-4095

MARK	DATE	DESCRIPTION
1	01.15.2014	Addendum 2

Issued: February 28 , 2014
Scale: 1/8" = 1'-0"

Copyright

CONFORMED SET

MECHANICAL BASEMENT PLANS- LBC & STANLEY HALL

M051

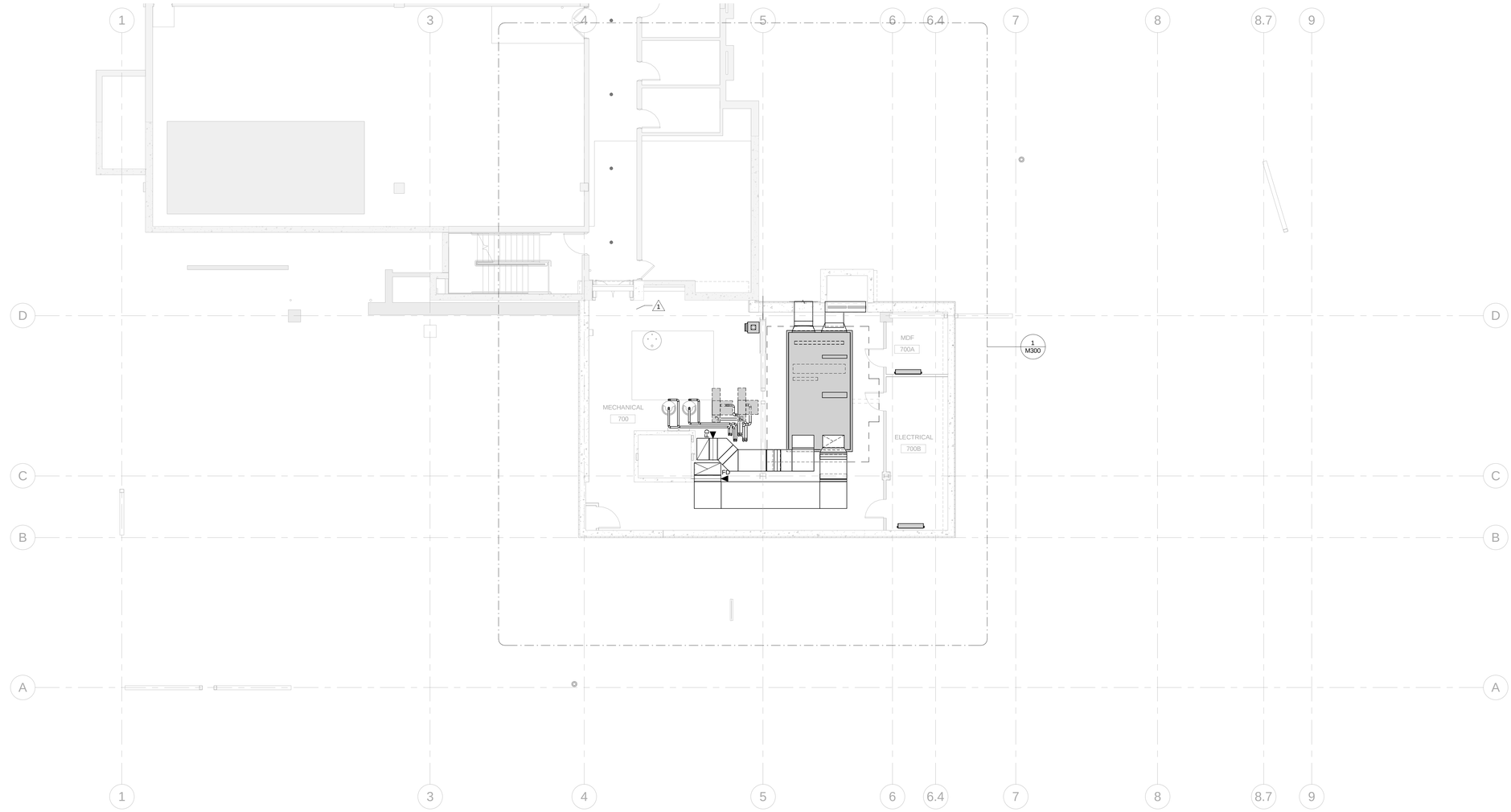

1 BASEMENT - DUCTWORK
1/8" = 1'-0"

2/26/2014 1:46:39 PM

boora

Boora Architects Inc.
720 SW Washington Suite 800
Portland, OR 97205
T. 503.226.1575 F. 503.241.7429
www.boora.com

dbHMS
design build engineering
303 W. Erie Street, Suite 510 Chicago, IL 60654
office: 312.915.0557
fax: 312.915.0558
website: www.dbhms.com

BENJAMIN RUBACH
REGISTERED
No. PE11100371
STATE OF
INDIANA
PROFESSIONAL ENGINEER

Earlham College Science Complex
Phase 2

801 National Road West
Richmond, IN 47374-4095

MARK	DATE	DESCRIPTION
1	01.15.2014	Addendum 2

Issued: February 28 , 2014

Scale: 1/8" = 1'-0"

Copyright

CONFORMED SET

BASEMENT FLOOR PLAN - DUCTWORK

M100

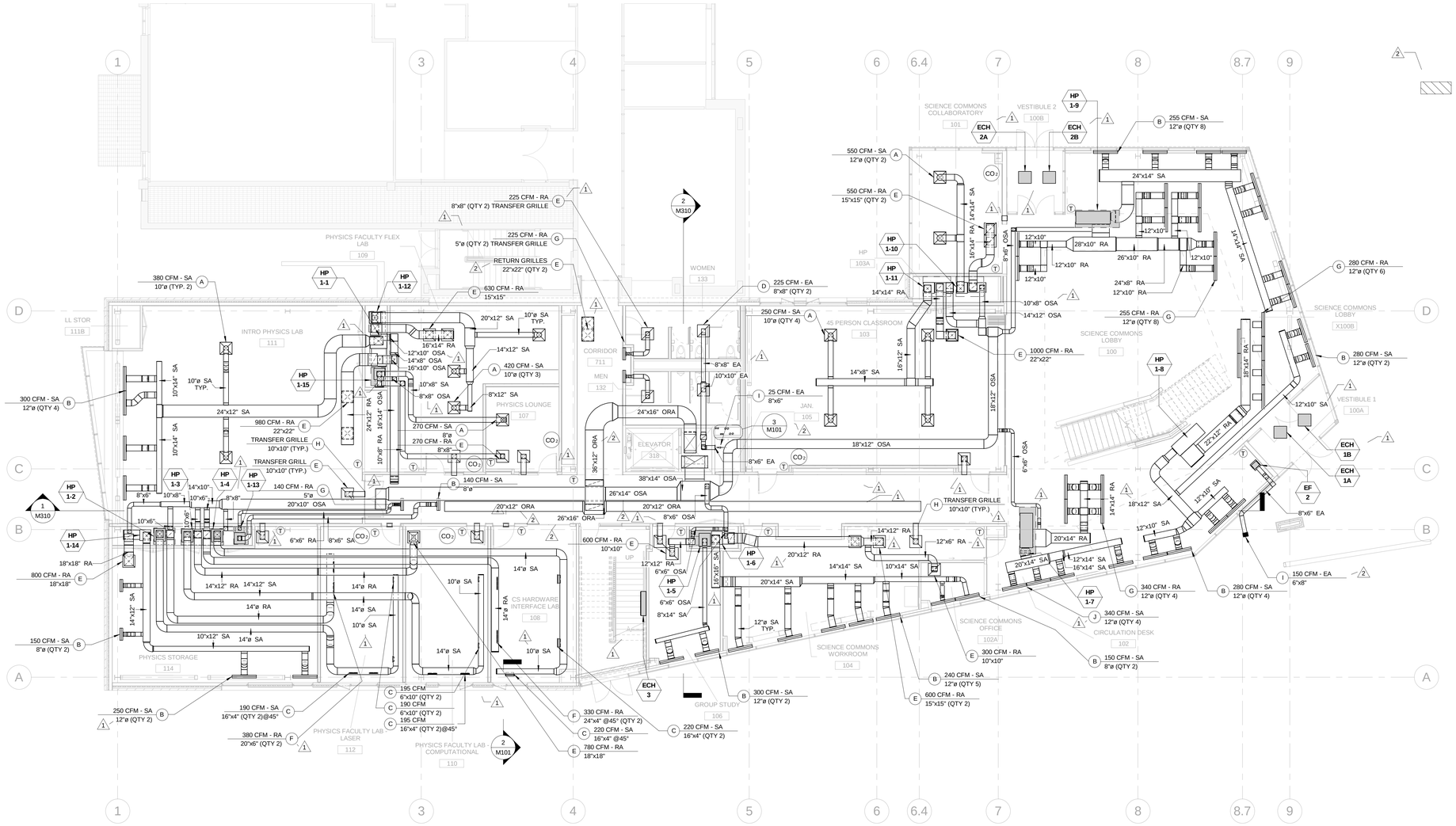

1 FIRST FLOOR - DUCTWORK
1/8" = 1'-0"

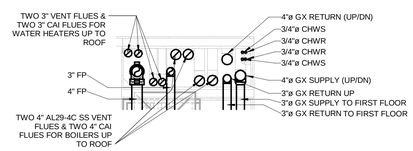

3 DETAIL SHOWING CAI/ BOILER FLUES AND PIPING INSIDE CHASE
1/2" = 1'-0"

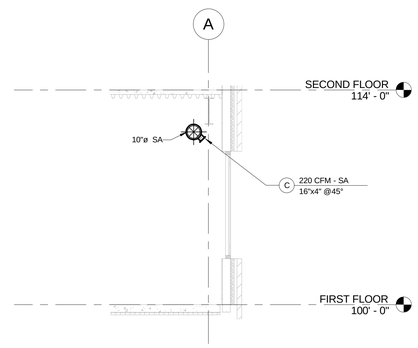

2 SECTION OF TITUS S300 FS@ 45°
1/4" = 1'-0"

boora

Boora Architects Inc.
720 SW Washington Suite 800
Portland, OR 97205
T. 503.226.1575 F. 503.241.7429
www.boora.com

dbHMS
design build engineering
303 W. Erie Street, Suite 510 Chicago, IL 60654
office: 312.915.0557
fax: 312.915.0558
website: www.dbhms.com

BENJAMIN RUBACH REGISTERED No. PE11100371 STATE OF INDIANA PROFESSIONAL ENGINEER

Earlham College Science Complex Phase 2

801 National Road West
Richmond, IN 47374-4095

MARK	DATE	DESCRIPTION
2	01.24.2014	Addendum 3
1	01.15.2014	Addendum 2

Issued: February 28 , 2014
Scale: As indicated

Copyright

CONFORMED SET

FIRST FLOOR PLAN - DUCTWORK

M101

2/26/2014 1:46:55 PM

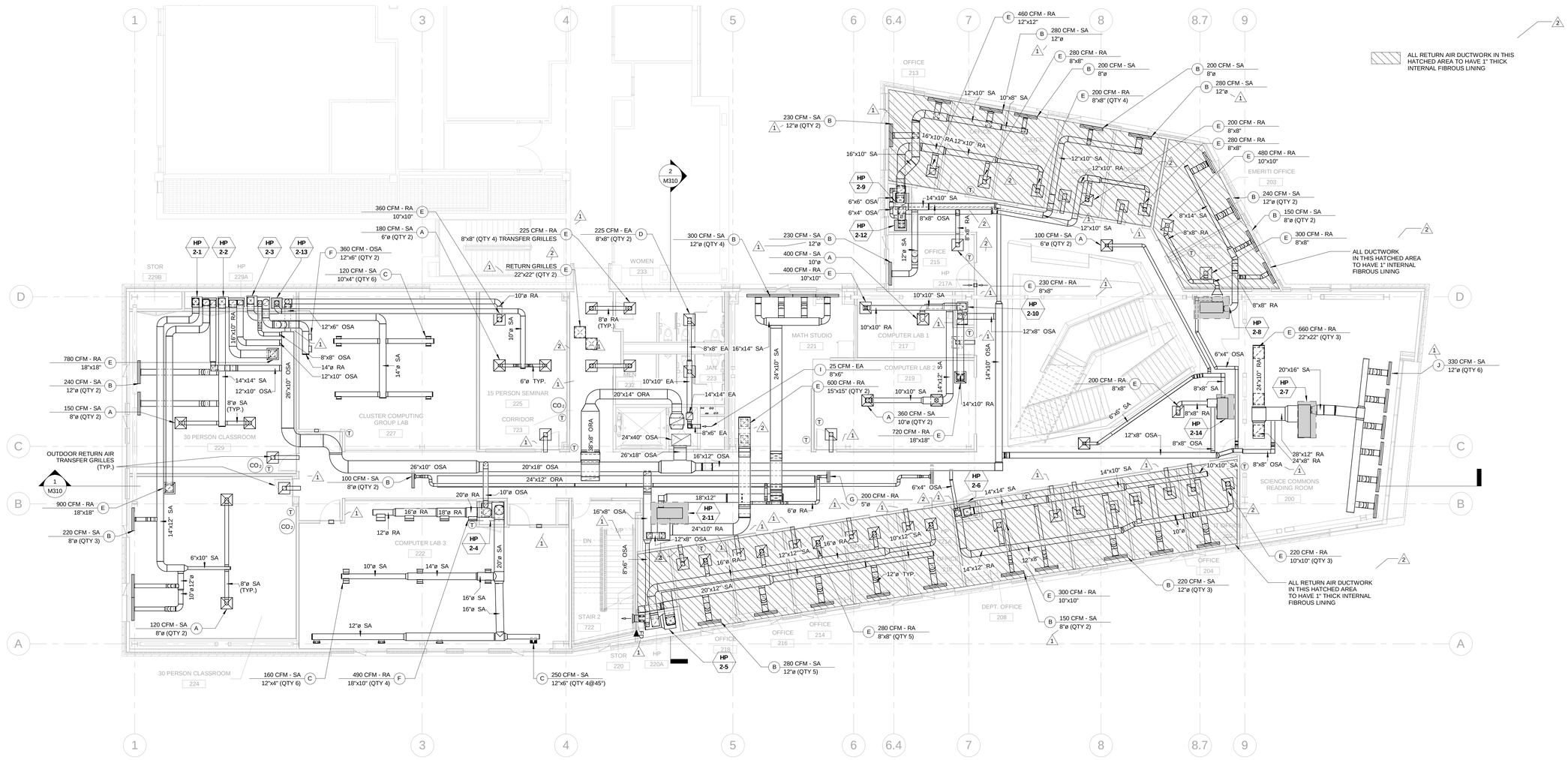

1 SECOND FLOOR - DUCTWORK
1/8" = 1'-0"

boora

Boora Architects Inc.
720 SW Washington Suite 800
Portland, OR 97205
T. 503.226.1575 F. 503.241.7429
www.boora.com

dbHMS
design build engineering
303 W. Erie Street, Suite 510 Chicago, IL 60654
office: 312.915.0557
fax: 312.915.0558
website: www.dbhms.com

BENJAMIN RUBACH REGISTERED No. PE11100371 STATE OF INDIANA PROFESSIONAL ENGINEER

Earlham College Science Complex
Phase 2
801 National Road West
Richmond, IN 47374-4095

MARK	DATE	DESCRIPTION
2	01.24.2014	Addendum 3
1	01.15.2014	Addendum 2

Issued: February 28 , 2014
Scale: As indicated

Copyright

CONFORMED SET

SECOND FLOOR PLAN - DUCTWORK

M102

2/26/2014 1:47:16 PM

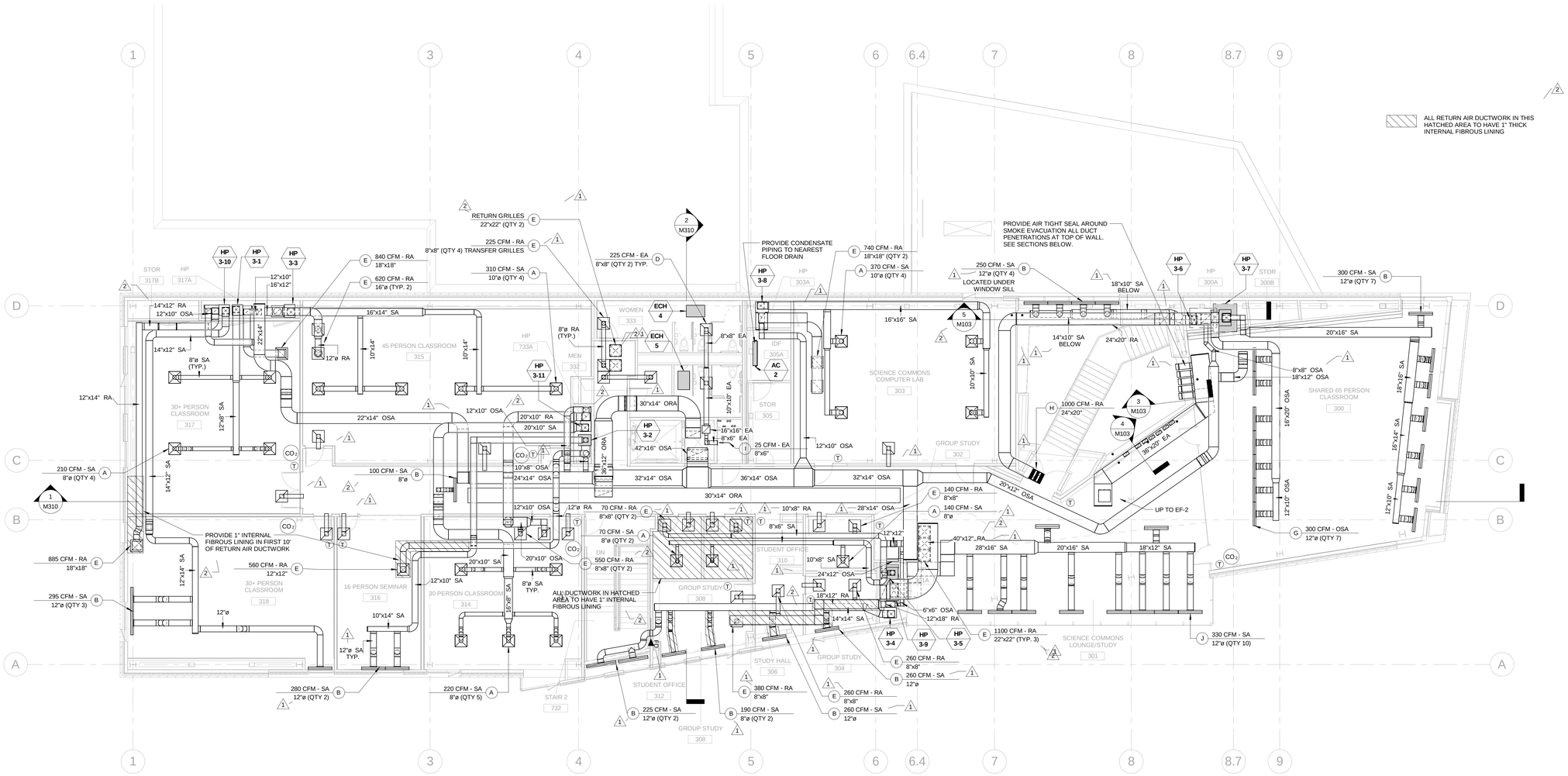

1 THIRD FLOOR - DUCTWORK
1/8" = 1'-0"

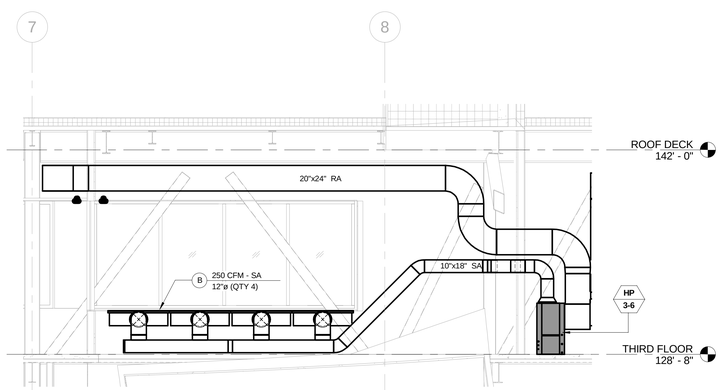

5 SUPPLY DUCTWORK TO UNDERSIDE OF ATRIUM WINDOW SILL
1/4" = 1'-0"

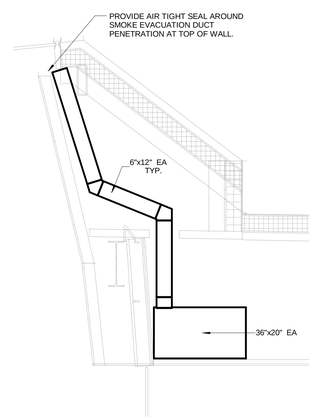

4 SMOKE EXHAUST EVACUATION DUCT WEST
1/2" = 1'-0"

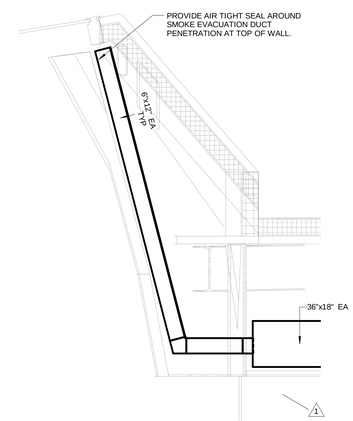

3 SMOKE EXHAUST EVACUATION DUCT SOUTH
1/2" = 1'-0"

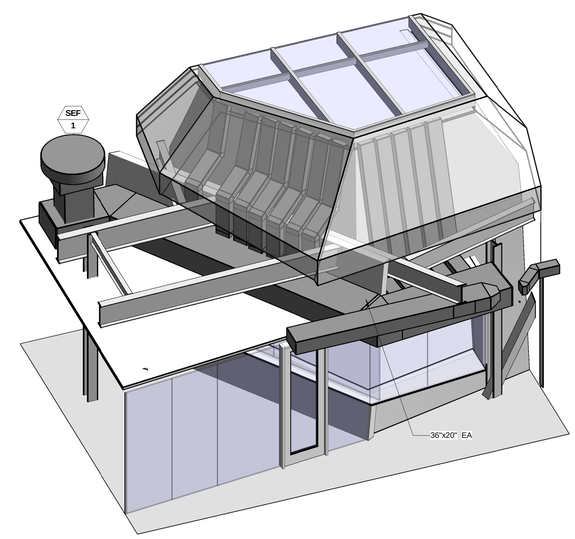

2 THIRD FLOOR - 3D SMOKE EXHAUST DUCTWORK

2/26/2014 1:47:44 PM

boora

Boora Architects Inc.
720 SW Washington Suite 800
Portland, OR 97205
T. 503.226.1575 F. 503.241.7429
www.boora.com

dbHMS
design build engineering
303 W. Erie Street, Suite 510 Chicago, IL 60654
office: 312.915.0557
fax: 312.915.0558
website: www.dbhms.com

BENJAMIN RUBACH REGISTERED No. PE11100371 STATE OF INDIANA PROFESSIONAL ENGINEER

Earlham College Science Complex Phase 2

801 National Road West
Richmond, IN 47374-4095

MARK	DATE	DESCRIPTION
2	01.24.2014	Addendum 3
1	01.15.2014	Addendum 2

Issued: February 28 , 2014
Scale: As indicated

Copyright

CONFORMED SET

THIRD FLOOR PLAN - DUCTWORK

M103

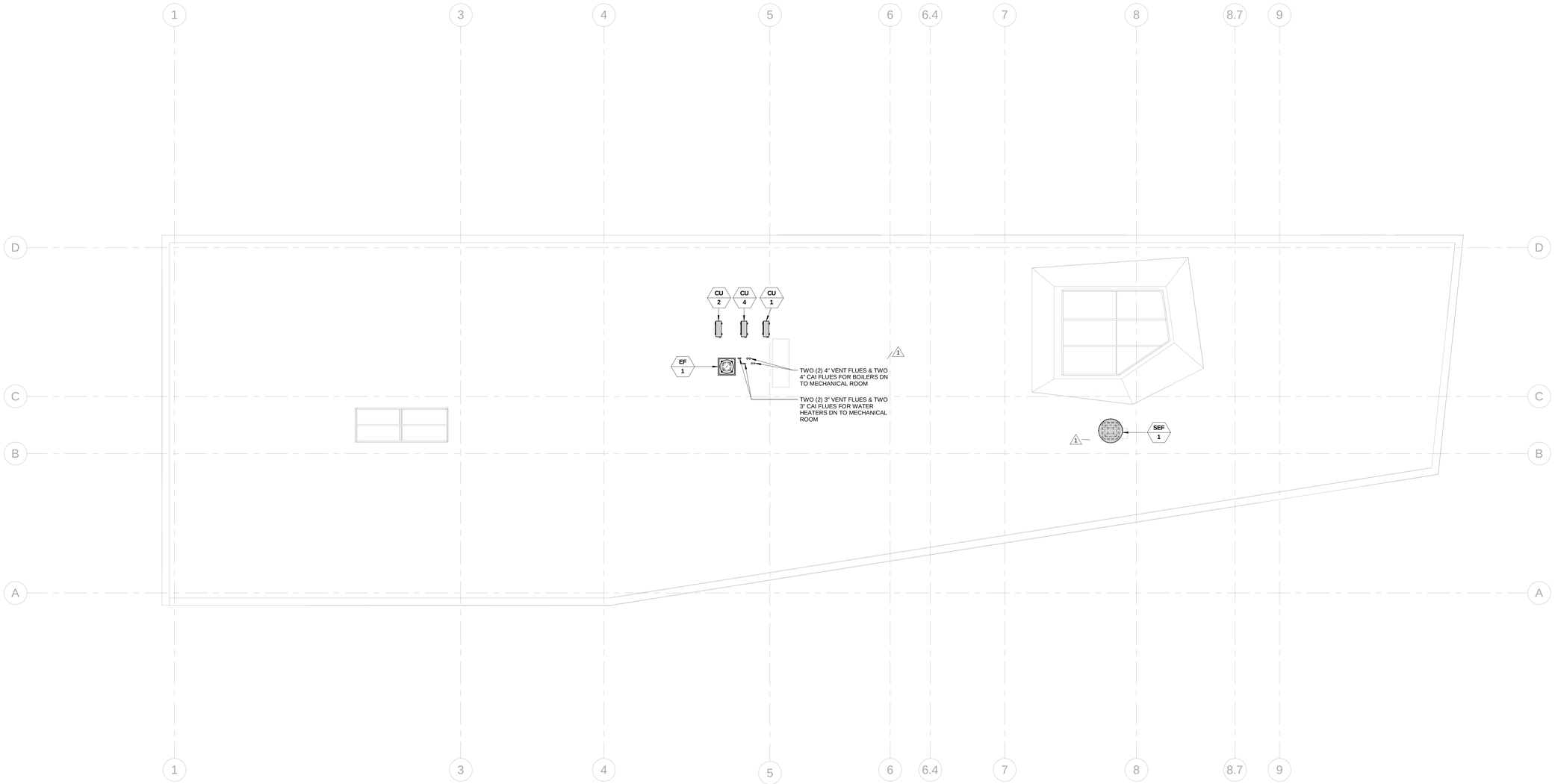

1 ROOF - DUCTWORK
1/8" = 1'-0"

2/26/2014 1:47:49 PM

boora

Boora Architects Inc.
720 SW Washington Suite 800
Portland, OR 97205
T. 503.226.1575 F. 503.241.7429
www.boora.com

dbHMS
design build engineering
303 W. Erie Street, Suite 510 Chicago, IL 60654
office: 312.915.0557
fax: 312.915.0558
website: www.dbhms.com

BENJAMIN RUBACH REGISTERED No. PE11100371 STATE OF INDIANA PROFESSIONAL ENGINEER

Earlham College Science Complex
Phase 2

801 National Road West
Richmond, IN 47374-4095

MARK	DATE	DESCRIPTION
1	01.15.2014	Addendum 2

Issued: February 28 , 2014
Scale: 1/8" = 1'-0"

Copyright

CONFORMED SET

ROOF PLAN - DUCTWORK

M104

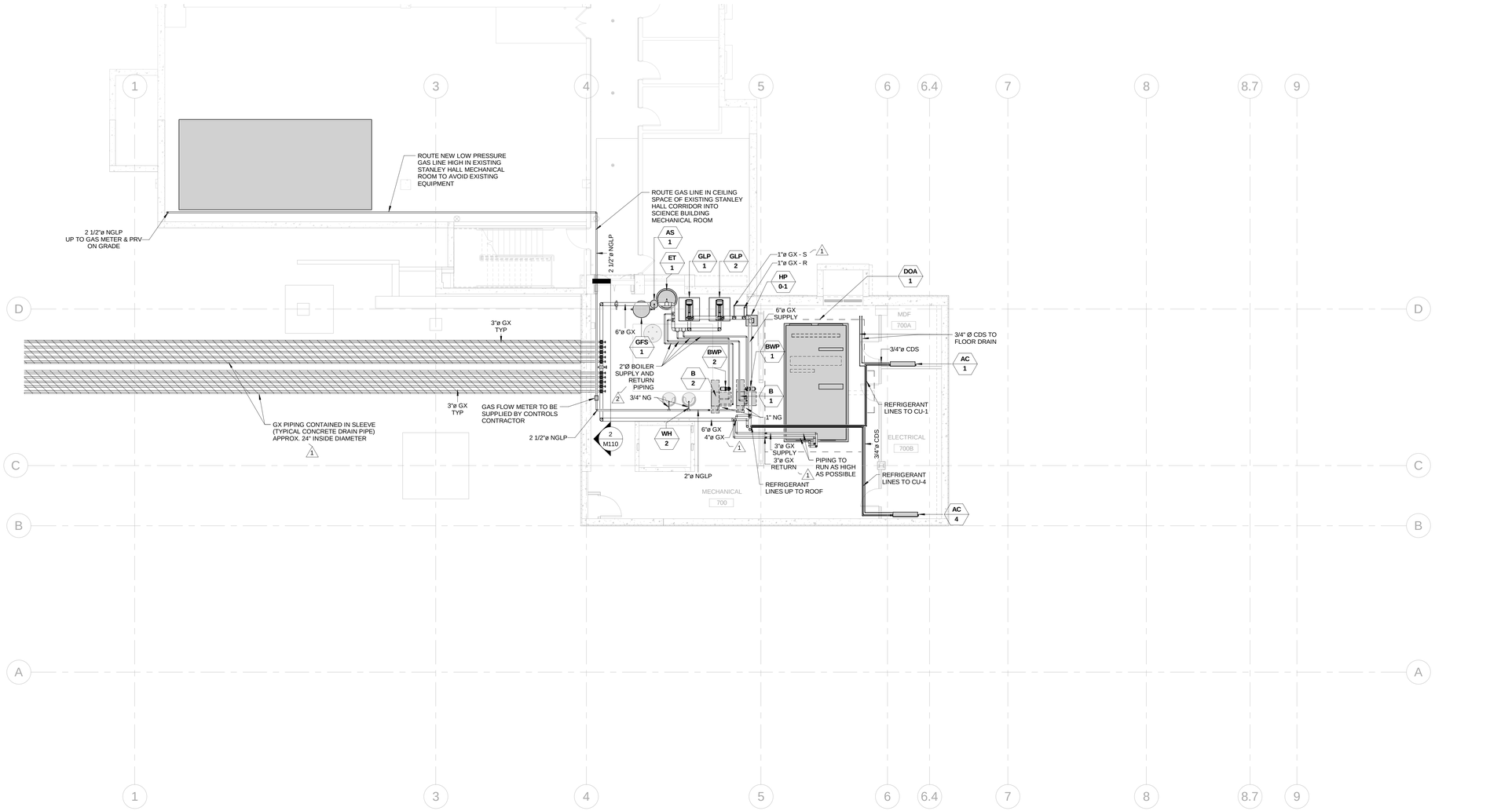

1 BASEMENT- PIPING
1/8" = 1'-0"

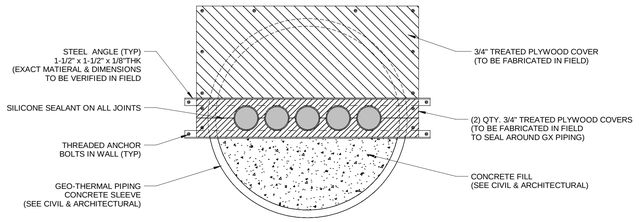

3 GX PIPING END SUPPORT & ENCLOSURE DETAIL
1 1/2" = 1'-0"

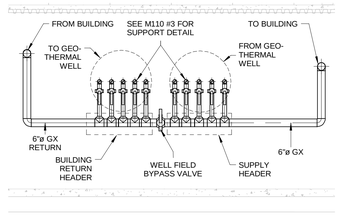

2 GEOTHERMAL HEADER SECTION
1/4" = 1'-0"

boora

Boora Architects Inc.
720 SW Washington Suite 800
Portland, OR 97205
T. 503.226.1575 F. 503.241.7429
www.boora.com

dbHMS
design build engineering
303 W. Erie Street, Suite 510 Chicago, IL 60654
office: 312.915.0557
fax: 312.915.0558
website: www.dbhms.com

BENJAMIN RUBACH REGISTERED No. PE11100371 STATE OF INDIANA PROFESSIONAL ENGINEER

Earlham College Science Complex
Phase 2
801 National Road West
Richmond, IN 47374-4095

MARK	DATE	DESCRIPTION
2	01.24.2014	Addendum 3
1	01.15.2014	Addendum 2

Issued: February 28 , 2014
Scale: As indicated

Copyright

CONFORMED SET

BASEMENT FLOOR PLAN - PIPING

M110

2/26/2014 1:48:03 PM

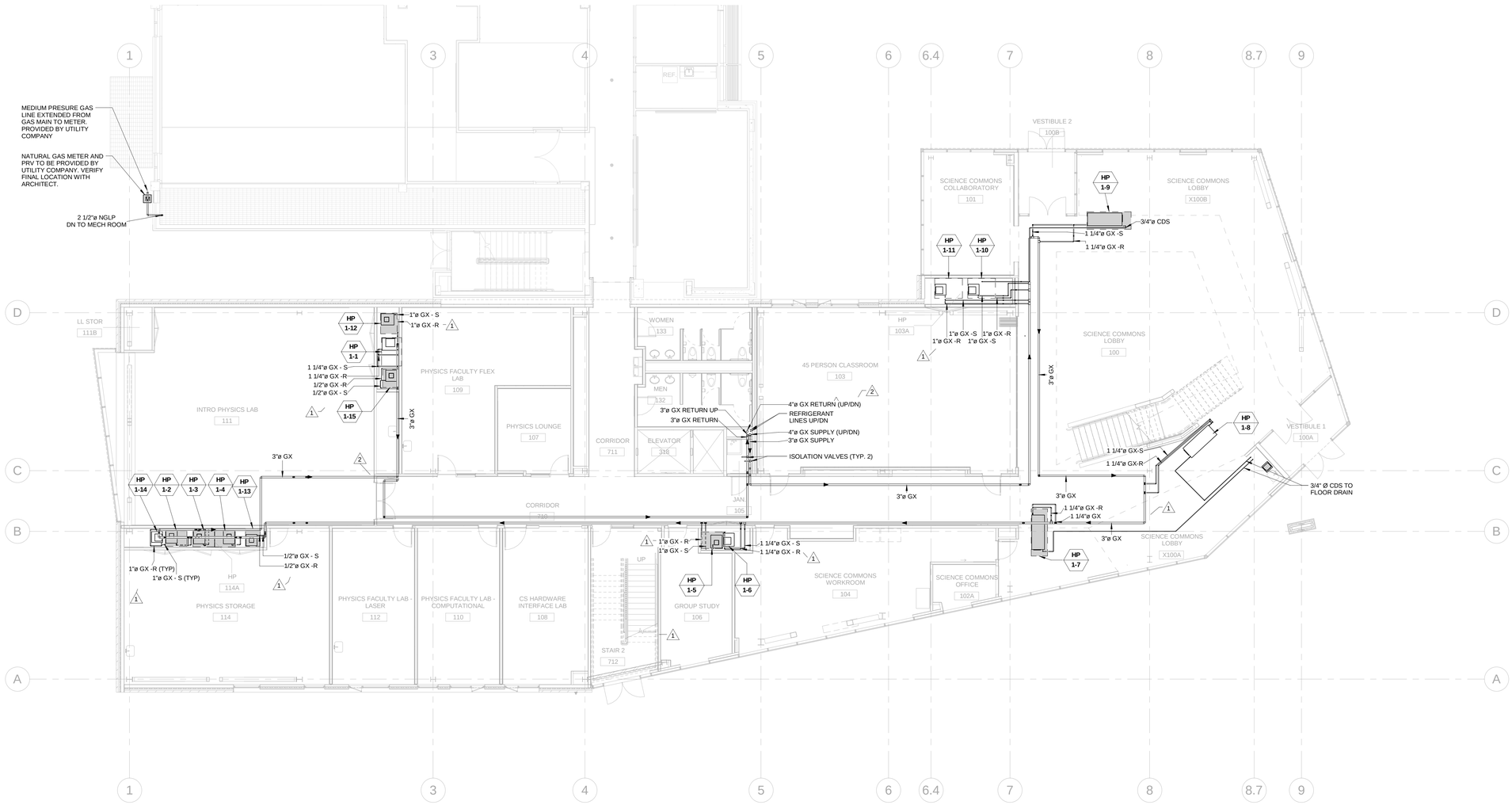

1 FIRST FLOOR- PIPING
1/8" = 1'-0"

2/26/2014 1:48:16 PM

boora

Boora Architects Inc.
720 SW Washington Suite 800
Portland, OR 97205
T. 503.226.1575 F. 503.241.7429
www.boora.com

dbHMS
design build engineering
303 W. Erie Street, Suite 510 Chicago, IL 60654
office: 312.915.0557
fax: 312.915.0558
website: www.dbhms.com

BENJAMIN RUBACH REGISTERED No. PE11100371 STATE OF INDIANA PROFESSIONAL ENGINEER

Earlham College Science Complex Phase 2

801 National Road West
Richmond, IN 47374-4095

MARK	DATE	DESCRIPTION
2	01.24.2014	Addendum 3
1	01.15.2014	Addendum 2

Issued: February 28 , 2014
Scale: 1/8" = 1'-0"

Copyright

CONFORMED SET

FIRST FLOOR PLAN - PIPING

M111

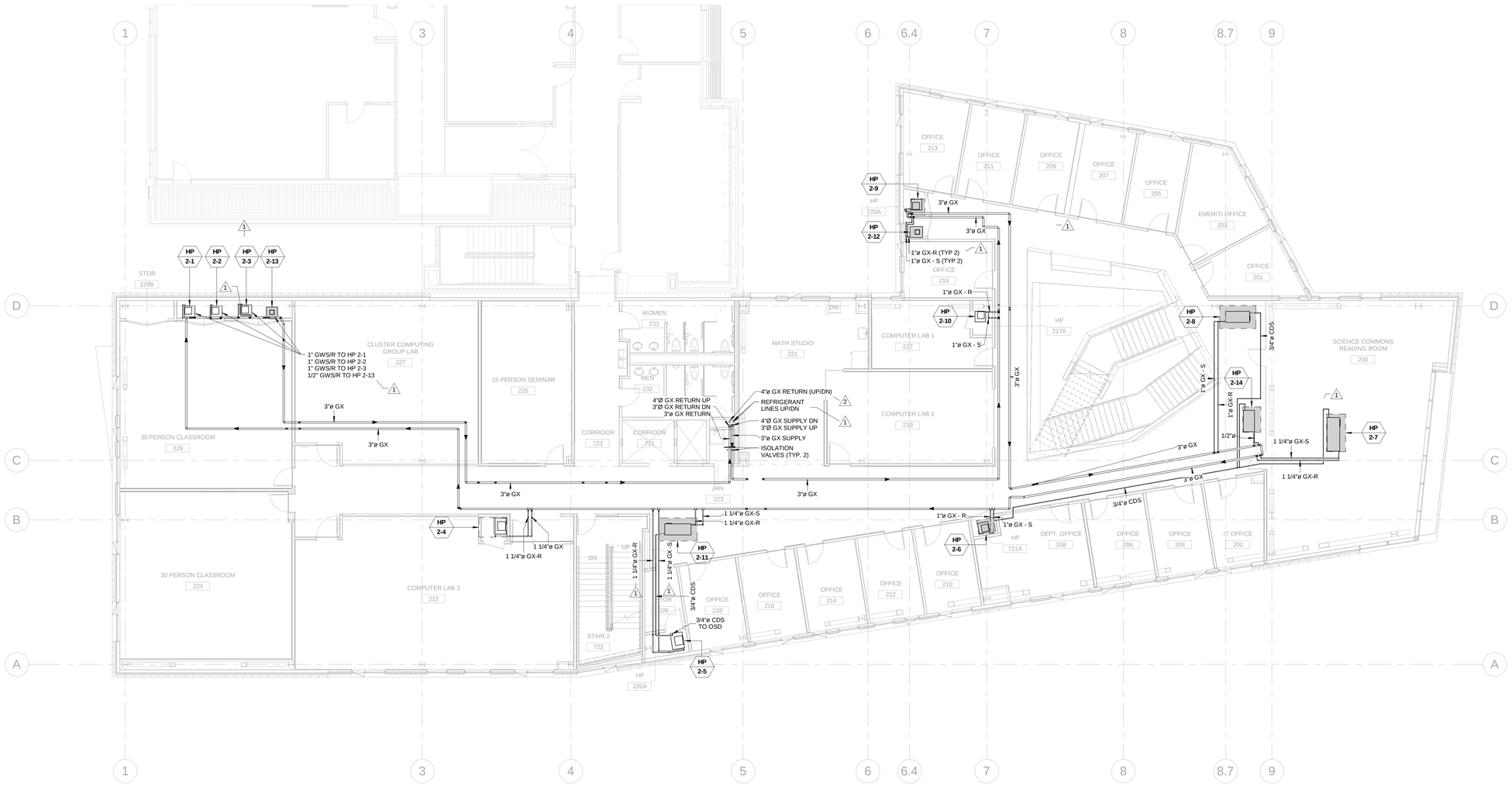

1 SECOND FLOOR- PIPING
1/8" = 1'-0"

2/26/2014 1:48:28 PM

boora

Boora Architects Inc.
720 SW Washington Suite 800
Portland, OR 97205
T. 503.226.1575 F. 503.241.7429
www.boora.com

dbHMS
design build engineering
303 W. Erie Street, Suite 510 Chicago, IL 60654
office: 312.915.0557
fax: 312.915.0558
website: www.dbhms.com

BENJAMIN RUBACH REGISTERED No. PE11100371 STATE OF INDIANA PROFESSIONAL ENGINEER

Earlham College Science Complex Phase 2

801 National Road West
Richmond, IN 47374-4095

MARK	DATE	DESCRIPTION
2	01.24.2014	Addendum 3
1	01.15.2014	Addendum 2

Issued: February 28 , 2014

Scale: 1/8" = 1'-0"

Copyright

CONFORMED SET

SECOND FLOOR PLAN - PIPING

M112

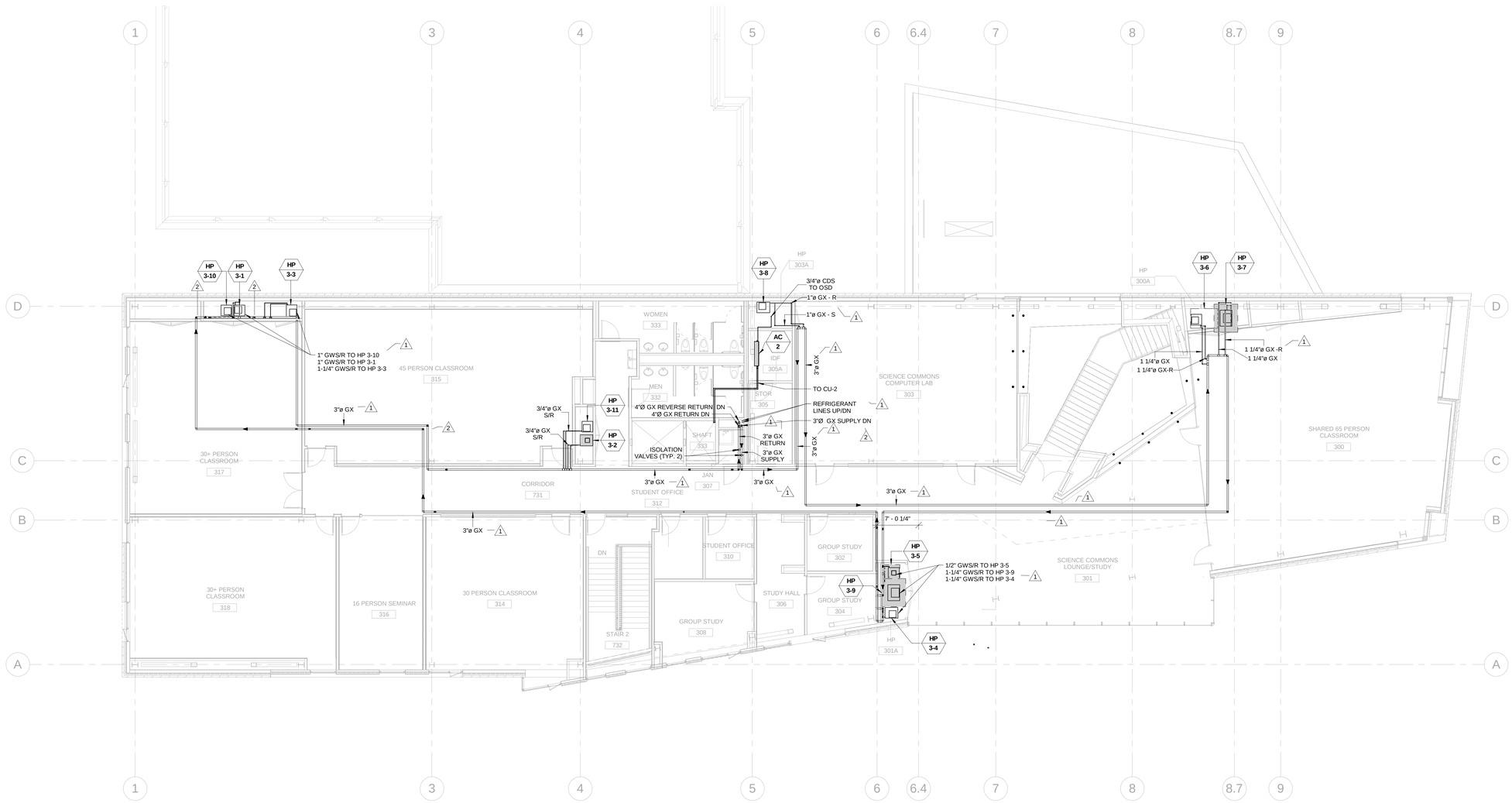

1 THIRD FLOOR - PIPING
1/8" = 1'-0"

2/26/2014 1:48:39 PM

boora

Boora Architects Inc.
720 SW Washington Suite 800
Portland, OR 97205
T. 503.226.1575 F. 503.241.7429
www.boora.com

dbHMS
design build engineering
303 W. Erie Street, Suite 510 Chicago, IL 60654
office: 312.915.0557
fax: 312.915.0558
website: www.dbhms.com

BENJAMIN RUBACH REGISTERED No. PE11100371 STATE OF INDIANA PROFESSIONAL ENGINEER

Earlham College Science Complex
Phase 2

801 National Road West
Richmond, IN 47374-4095

MARK	DATE	DESCRIPTION
2	01.24.2014	Addendum 3
1	01.15.2014	Addendum 2

Issued: February 28 , 2014

Scale: 1/8" = 1'-0"

Copyright

CONFORMED SET

THIRD FLOOR PLAN - PIPING

M113

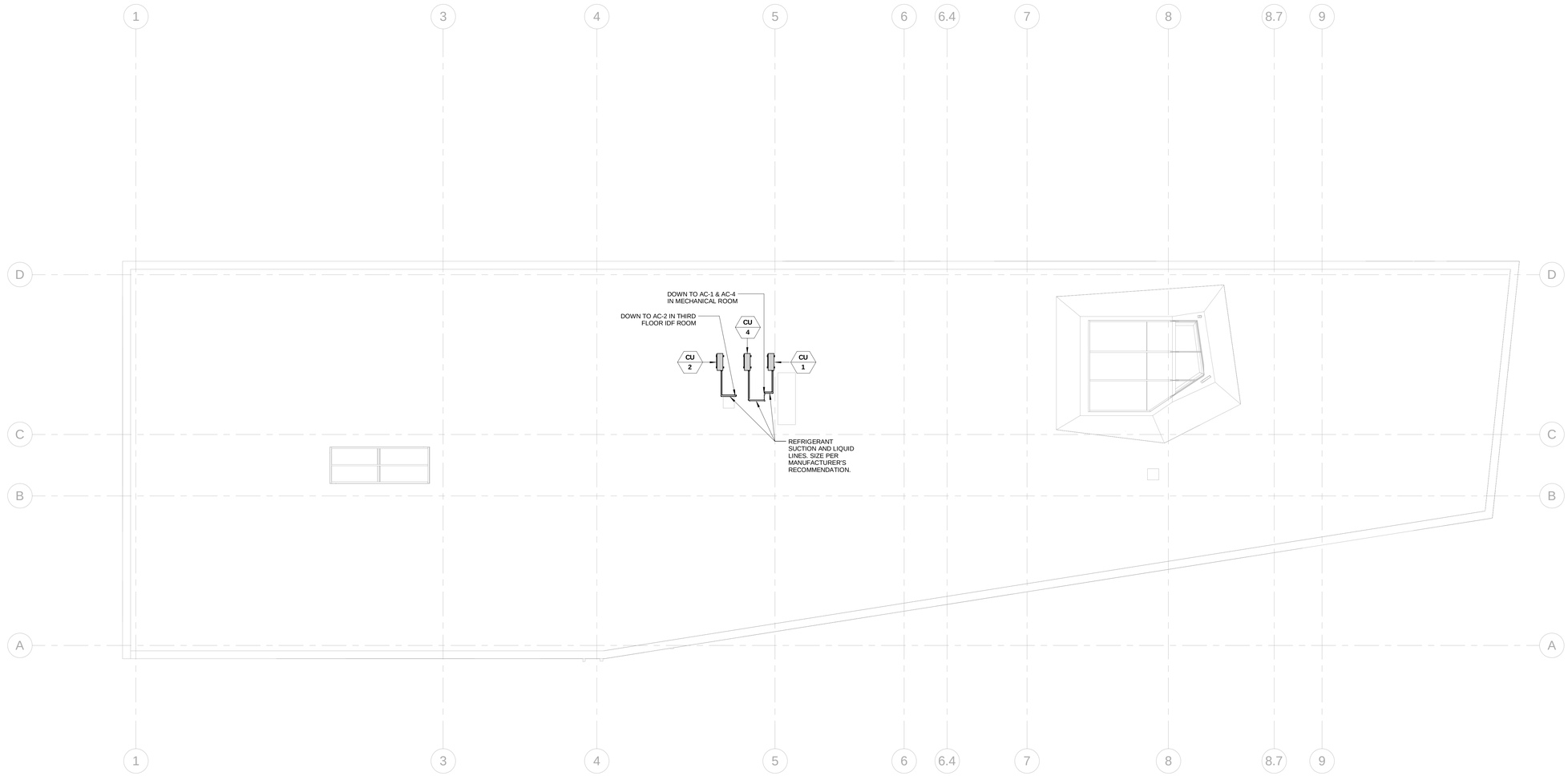

1 ROOF - PIPING
1/8" = 1'-0"

2/26/2014 1:48:43 PM

boora

Boora Architects Inc.
720 SW Washington Suite 800
Portland, OR 97205
T. 503.226.1575 F. 503.241.7429
www.boora.com

dbHMS
design build engineering
303 W. Erie Street, Suite 510 Chicago, IL 60654
office: 312.915.0557
fax: 312.915.0558
website: www.dbhms.com

BENJAMIN RUBACH
REGISTERED
No. PE11100371
STATE OF
INDIANA
PROFESSIONAL ENGINEER

Earlham College Science Complex Phase 2

801 National Road West
Richmond, IN 47374-4095

MARK	DATE	DESCRIPTION

Issued: February 28 , 2014
Scale: 1/8" = 1'-0"

Copyright

CONFORMED SET

ROOF PLAN - PIPING

M114

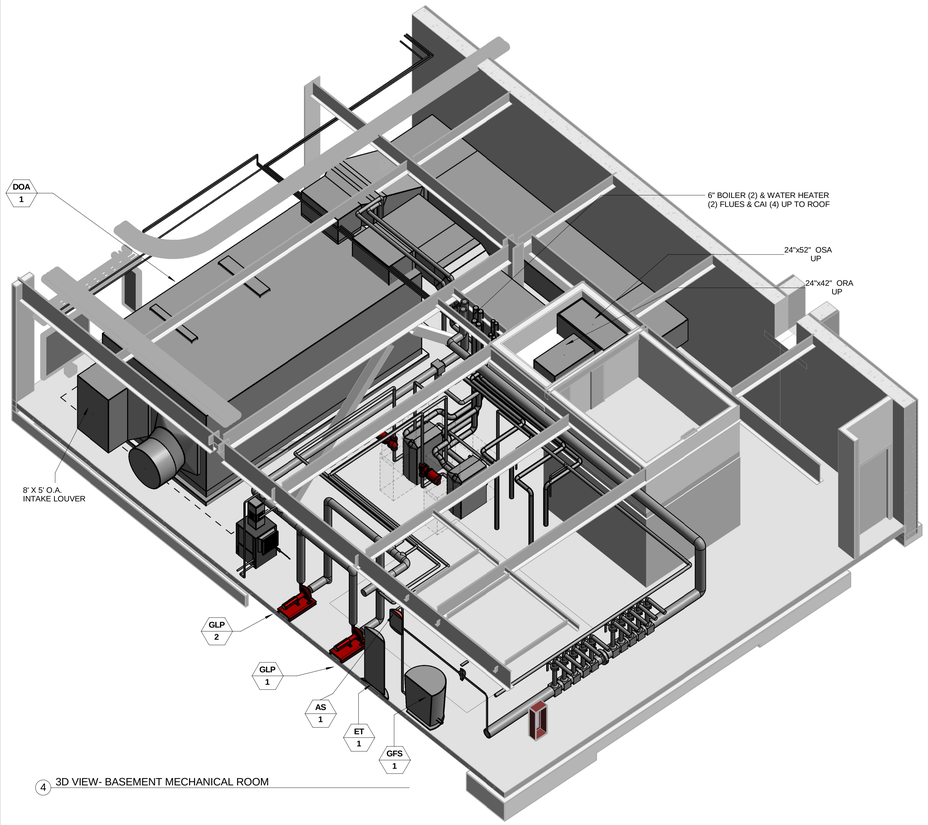

4 3D VIEW- BASEMENT MECHANICAL ROOM

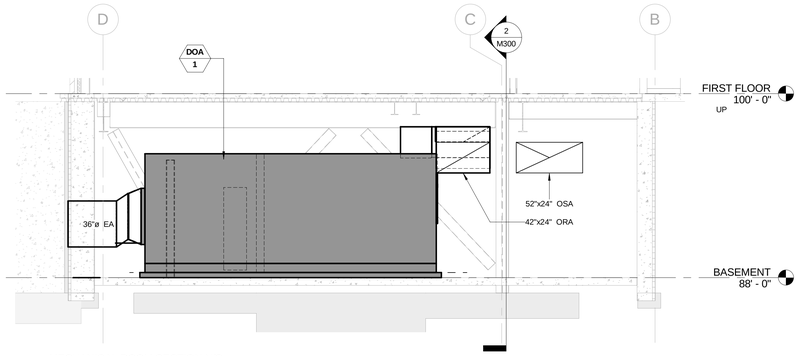

3 MECHANICAL ROOM SECTION N/S
1/4" = 1'-0"

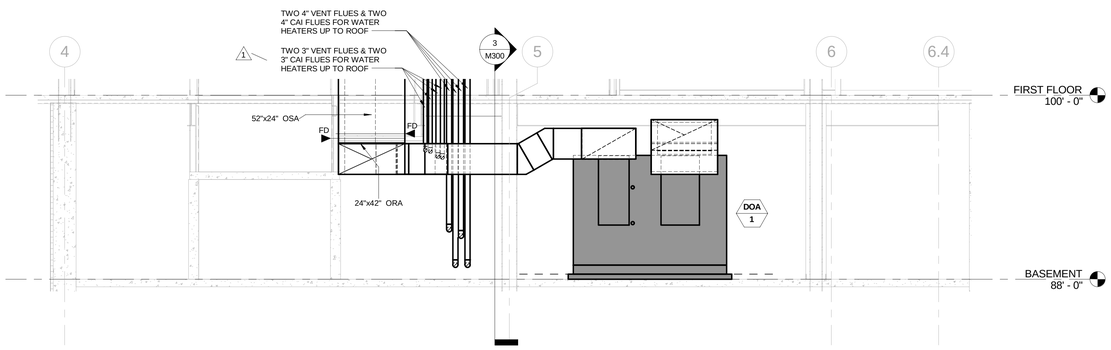

2 MECHANICAL ROOM SECTION E/W
1/4" = 1'-0"

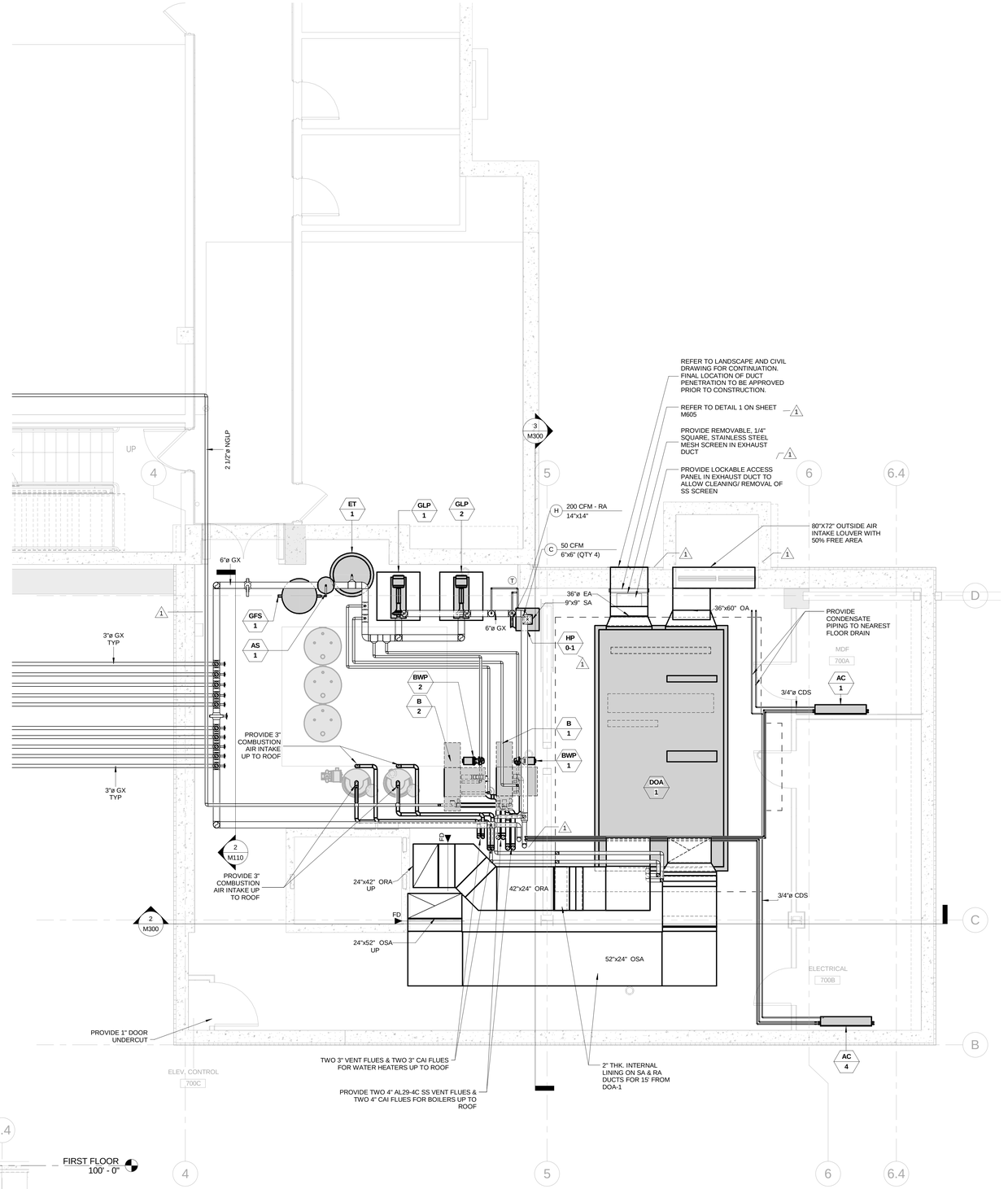

1 BASEMENT MECHANICAL ROOM LAYOUT
1/4" = 1'-0"

N

2/26/2014 1:49:05 PM

boora

Boora Architects Inc.
720 SW Washington Suite 800
Portland, OR 97205
T. 503.226.1575 F. 503.241.7429
www.boora.com

dbHMS
design build engineering
303 W. Erie Street, Suite 510 Chicago, IL 60654
office: 312.915.0557
fax: 312.915.0558
website: www.dbhms.com

BENJAMIN RUBACH REGISTERED No. PE11100371 STATE OF INDIANA PROFESSIONAL ENGINEER

Earlham College Science Complex Phase 2

801 National Road West
Richmond, IN 47374-4095

MARK	DATE	DESCRIPTION
1	01.15.2014	Addendum 2

Issued: February 28 , 2014
Scale: 1/4" = 1'-0"

Copyright

CONFORMED SET

BASEMENT MECHANICAL ROOM

M300

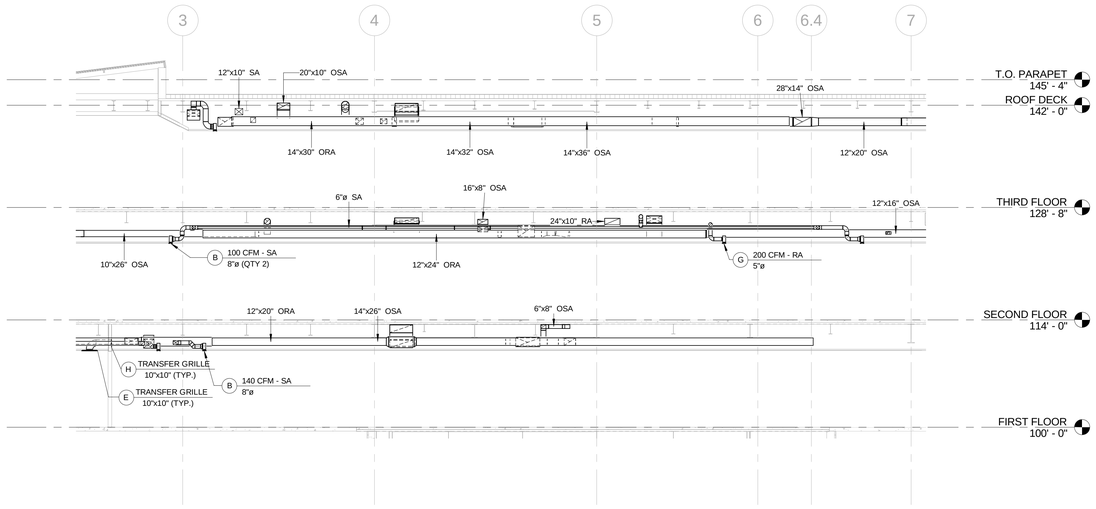

1 E/W SECTION - DUCTWORK
1/8" = 1'-0"

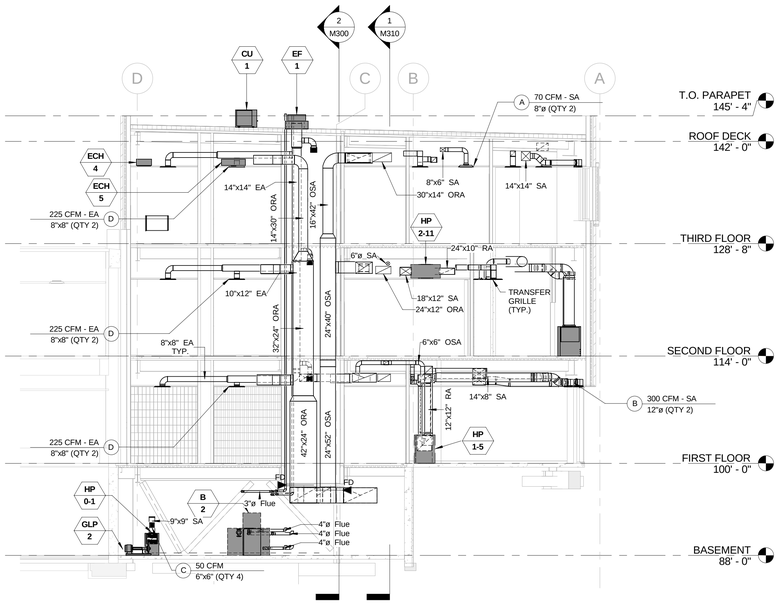

2 N/S SECTION - DUCTWORK
1/8" = 1'-0"

boora

Boora Architects Inc.
720 SW Washington Suite 800
Portland, OR 97205
T. 503.226.1575 F. 503.241.7429
www.boora.com

dbHMS
design build engineering
303 W. Erie Street, Suite 510 Chicago, IL 60654
office: 312.915.0557
fax: 312.915.0558
website: www.dbhms.com

BENJAMIN RUBACH
REGISTERED
No. PE11100371
STATE OF
INDIANA
PROFESSIONAL ENGINEER

Earlham College Science Complex Phase 2

801 National Road West
Richmond, IN 47374-4095

MARK	DATE	DESCRIPTION
1	01.15.2014	Addendum 2

Issued: February 28 , 2014

Scale: 1/8" = 1'-0"

Copyright

CONFORMED SET

BUILDING SECTIONS

M310

2/26/2014 1:49:16 PM

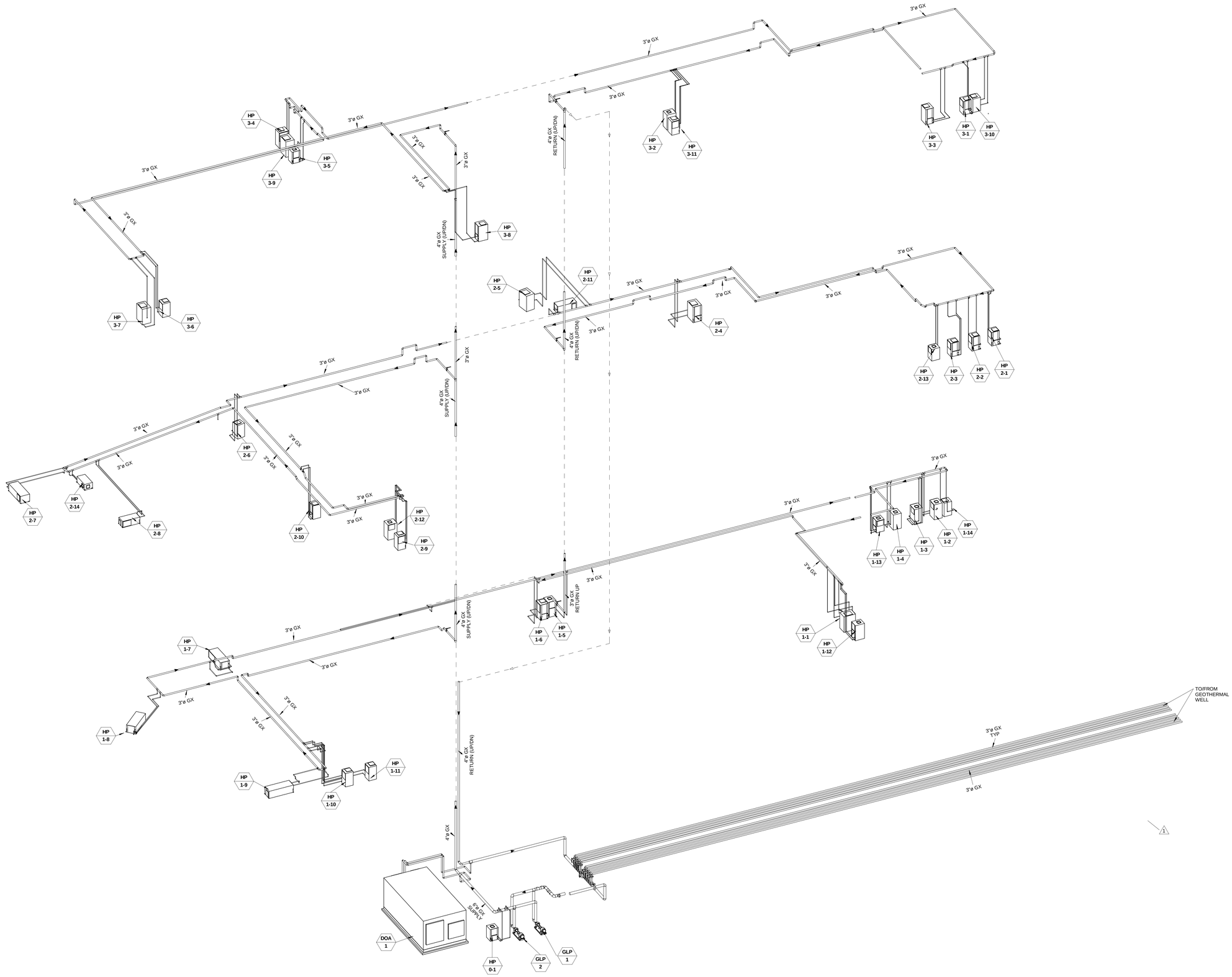

boora

Boora Architects Inc.
720 SW Washington Suite 800
Portland, OR 97205
T. 503.226.1575 F. 503.241.7429
www.boora.com

dbHMS
design build engineering
303 W. Erie Street, Suite 510 Chicago, IL 60654
office: 312.915.0557
fax: 312.915.0558
website: www.dbhms.com

BENJAMIN RUBACH REGISTERED No. PE11100371 STATE OF INDIANA PROFESSIONAL ENGINEER

Earlham College Science Complex Phase 2

801 National Road West
Richmond, IN 47374-4095

MARK	DATE	DESCRIPTION
1	01.15.2014	Addendum 2

Issued: February 28 , 2014

Scale: NTS

Copyright

CONFORMED SET

GEOTHERMAL PIPING RISER DIAGRAM

M400

2/26/2014 5:30:45 PM

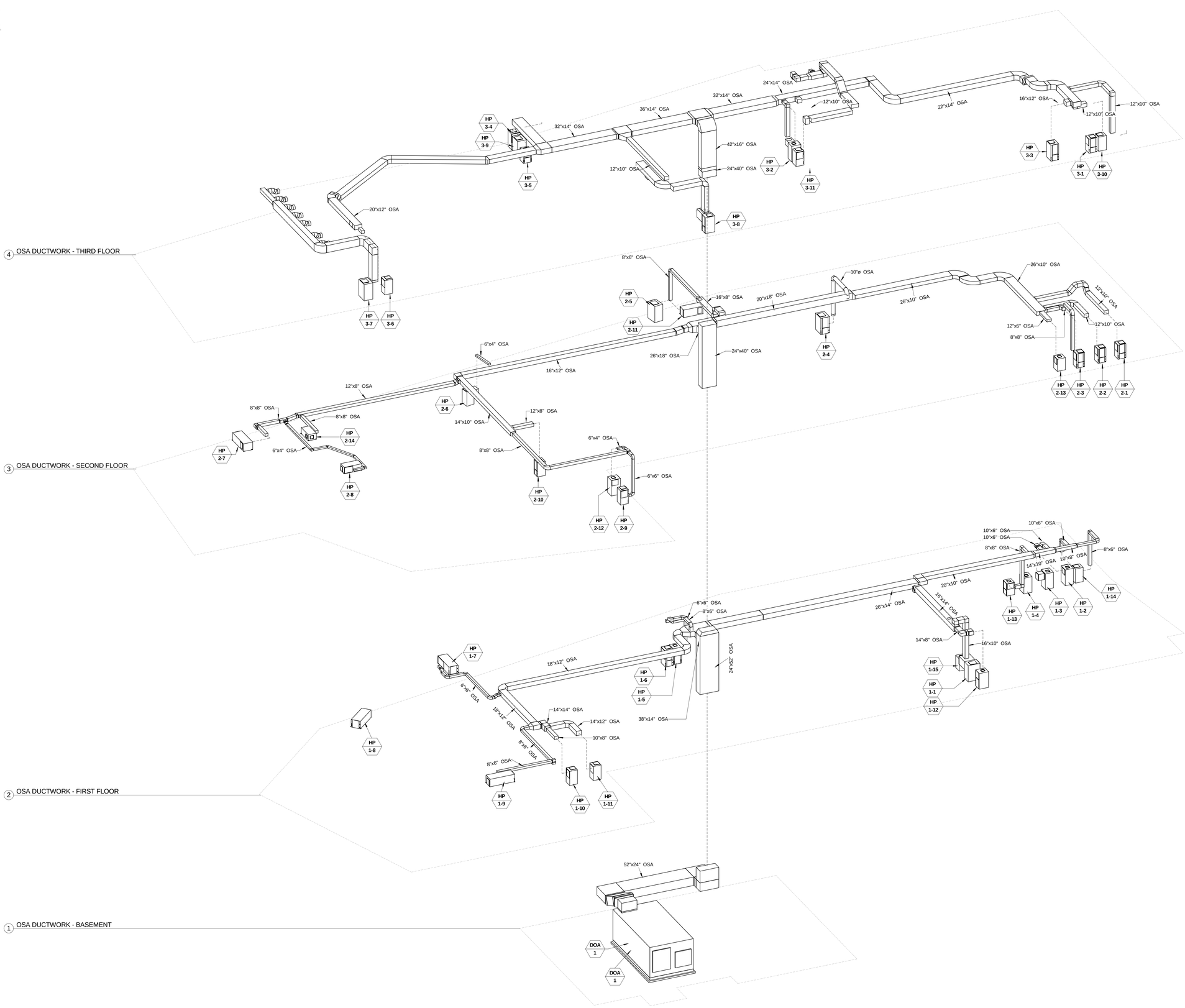

2/26/2014 1:49:40 PM

boora

Boora Architects Inc.
720 SW Washington Suite 800
Portland, OR 97205
T. 503.226.1575 F. 503.241.7429
www.boora.com

dbHMS
design build engineering
303 W. Erie Street, Suite 510 Chicago, IL 60654
office: 312.915.0557
fax: 312.915.0558
website: www.dbhms.com

BENJAMIN RUBACH REGISTERED No. PE11100371 STATE OF INDIANA PROFESSIONAL ENGINEER

Earlham College Science Complex Phase 2

801 National Road West
Richmond, IN 47374-4095

MARK	DATE	DESCRIPTION
1	01.15.2014	Addendum 2

Issued: February 28 , 2014

Scale: NTS

Copyright

CONFORMED SET

OUTSIDE SUPPLY AIR FLOW RISER DIAGRAM

M401

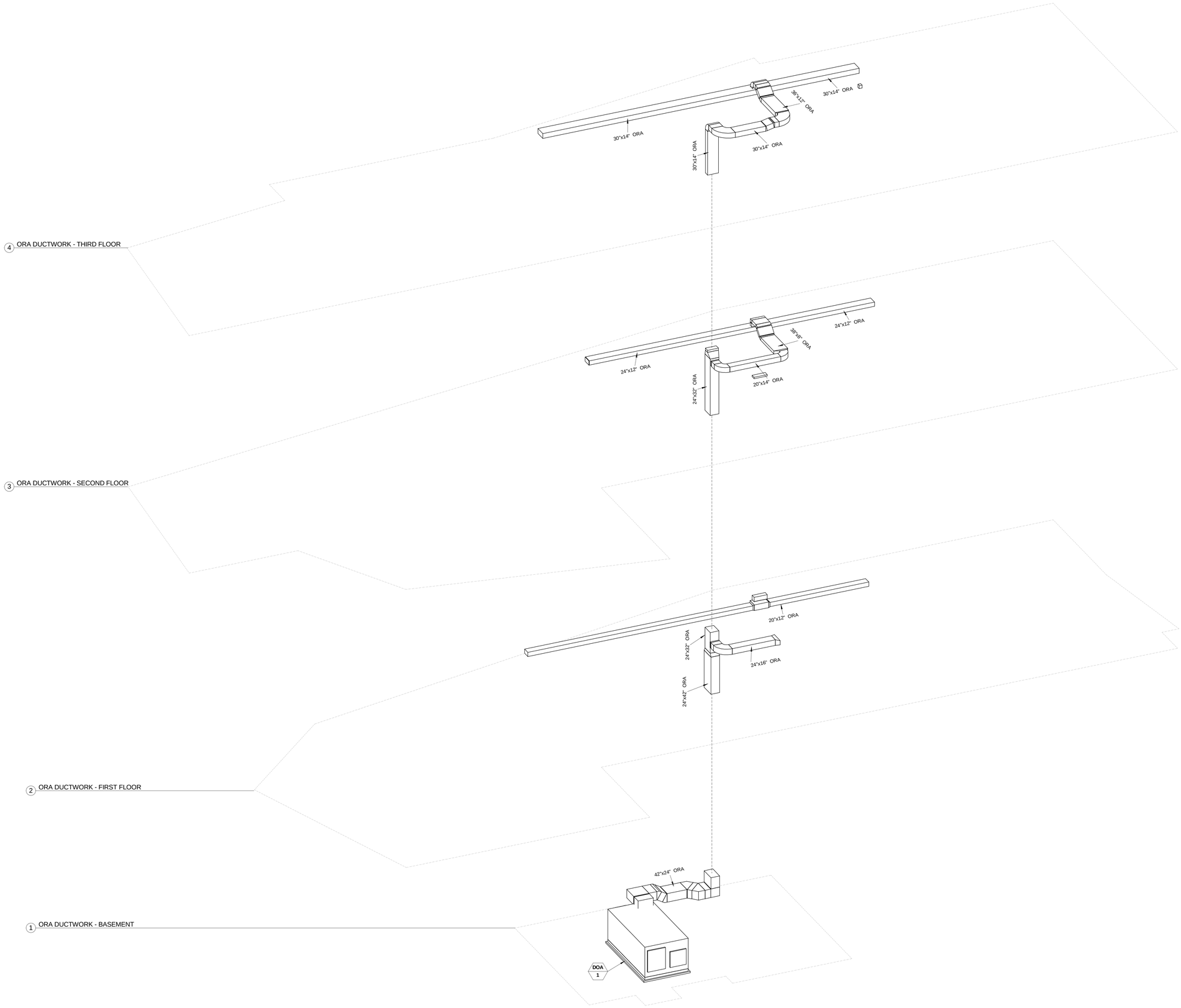

boora

Boora Architects Inc.
720 SW Washington Suite 800
Portland, OR 97205
T. 503.226.1575 F. 503.241.7429
www.boora.com

dbHMS
design build engineering
303 W. Erie Street, Suite 510 Chicago, IL 60654
office: 312.915.0557
fax: 312.915.0558
website: www.dbhms.com

BENJAMIN RUBACH
REGISTERED
No. PE11100371
STATE OF
INDIANA
PROFESSIONAL ENGINEER

Earlham College Science Complex Phase 2

801 National Road West
Richmond, IN 47374-4095

MARK	DATE	DESCRIPTION
1	01.15.2014	Addendum 2

Issued: February 28 , 2014

Scale: NTS

Copyright

CONFORMED SET

OUTSIDE RETURN AIR FLOW RISER DIAGRAM

M402

2/26/2014 1:49:45 PM

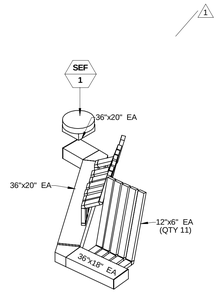

THIRD FLOOR SMOKE
EXHAUST SYSTEM

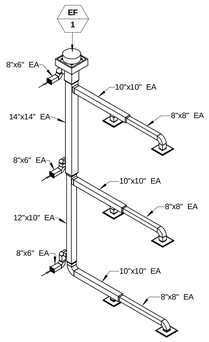

RESTROOMS AND JANITOR'S
CLOSETS EXHAUST SYSTEM

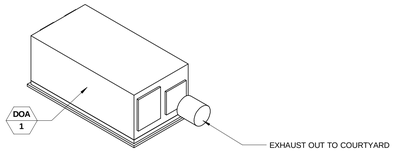

N

2/26/2014 5:30:47 PM

boora

Boora Architects Inc.
720 SW Washington Suite 800
Portland, OR 97205
T. 503.226.1575 F. 503.241.7429
www.boora.com

dbHMS
design build engineering
303 W. Erie Street, Suite 510 Chicago, IL 60654
office: 312.915.0557
fax: 312.915.0558
website: www.dbhms.com

BENJAMIN RUBACH
REGISTERED
No. PE11100371
STATE OF
INDIANA
PROFESSIONAL ENGINEER

Earlham College Science Complex
Phase 2

801 National Road West
Richmond, IN 47374-4095

MARK	DATE	DESCRIPTION
1	01.15.2014	Addendum 2

Issued: February 28 , 2014
Scale: NTS

Copyright

CONFORMED SET

EXHAUST AIR FLOW
RISER DIAGRAM

M403

WATER TO AIR GEO-EXCHANGE HEAT PUMP SCHEDULE

TAG	MARK	LOCATION	MANFACTURER	MODEL	SUPPLY AIR FLOW (CFM)	MAX OUTSIDE AIR (CFM)	ESP (IN-WG)	SOURCE (GPM)	SOURCE P.D. (FT.)	COOLING CAP. TMBH	COOLING CAP. SMBH	COOLING SOURCE EWT (F)	COOLING EER	HEATING CAP. TMBH	HEATING SOURCE EWT (F)	HEATING COP	ELECTRICAL MCA (A)	ELECTRICAL MOCP (A)	ELECTRICAL VOLTAGE	ELECTRICAL HZ	ELECTRICAL PHASE	REMARKS
HP	0-1	BASEMENT	CLIMATEMASTER	TSV-006	200	0	0.50	1.3	2.6	5	5	95	9.9	5	40	3.4	4.3	15.0	277	60	1	2,3,4,5,6,7,8,9
HP	1-1	111 INTRO PHYSICS LAB	CLIMATEMASTER	TZV-060	1960	430	0.68	12.5	13.4	37	29	95	11.2	46	40	3.6	15.0	20.0	480	60	3	1,2,3,4,5,6,7,8,9
HP	1-2	112 PHYSICS FACULTY LAB- COMPUTATIONAL	CLIMATEMASTER	TSV-018	760	130	0.43	3.8	4.7	15	12	95	10.6	11	40	3.8	14.4	20.0	277	60	1	1,2,3,4,5,6,7,8,9
HP	1-3	110 PHYSICS FACULTY LAB- LASER	CLIMATEMASTER	TSV-018	780	130	0.55	3.8	4.7	15	12	95	10.6	11	40	3.8	14.4	20.0	277	60	1	1,2,3,4,5,6,7,8,9
HP	1-4	108 CS HARDWARE INTERFACE LAB	CLIMATEMASTER	TSV-018	660	130	0.38	3.8	4.7	13	12	95	11.0	12	40	3.6	14.4	20.0	277	60	1	1,2,3,4,5,6,7,8,9
HP	1-5	106 GROUP STUDY	CLIMATEMASTER	TSV-018	600	50	0.50	3.8	4.7	10	9	95	11.0	12	40	3.4	14.4	20.0	277	60	1	1,2,3,4,5,6,7,8,9
HP	1-6	102A+104- SCIENCE COMMONS WORKROOM + OFFICE	CLIMATEMASTER	TZV-042	1500	65	0.62	8.8	6.4	33	41	95	11.0	33	40	3.6	10.3	15.0	480	60	3	1,2,3,4,5,6,7,8,9
HP	1-7	102 CIRCULATION DESK	CLIMATEMASTER	TZH-042	1360	35	0.45	8.8	6.4	28	27	95	10.7	25	40	3.6	10.3	15.0	480	60	3	1,2,3,4,5,6,7,8,9
HP	1-8	X100A SCIENCE COMMONS LOBBY	CLIMATEMASTER	TZH-042	1680	100	0.48	8.8	6.4	35	32	95	10.5	30	40	3.6	10.3	15.0	480	60	3	1,2,3,4,5,6,7,8,9
HP	1-9	100 + X100B SCIENCE COMMONS LOBBY	CLIMATEMASTER	TZH-060	2040	100	0.68	12.5	13.4	42	39	95	10.8	37	40	3.6	15.0	20.0	480	60	3	1,2,3,4,5,6,7,8,9
HP	1-10	101 SCIENCE COMMONS COLLABORATORY	CLIMATEMASTER	TZV-030	1100	150	0.35	6.3	5.3	15	11	95	10.2	22	40	3.7	8.6	15.0	480	60	3	1,2,3,4,5,6,7,8,9
HP	1-11	103 SHARED 45 PERSON COLLOQUIUM	CLIMATEMASTER	TZV-030	1000	740	0.57	6.3	5.3	18	9	95	10.3	23	40	3.7	8.6	15.0	480	60	3	1,2,3,4,5,6,7,8,9
HP	1-12	109 PHYSICS FACULTY FLEX LAB	CLIMATEMASTER	TSV-036	1260	330	0.60	7.5	6.7	30	30	95	10.2	32	40	3.6	8.9	10.7	480	60	3	1,2,3,4,5,6,7,8,9
HP	1-13	1ST FLOOR CORRIDOR	CLIMATEMASTER	TSV-006	140	140	0.63	1.3	2.6	2	1	95	9.9	3	40	3.4	4.3	15.0	277	60	1	2,3,4,5,6,7,8,9
HP	1-14	114 PHYSICS STORAGE	CLIMATEMASTER	TZV-030	800	20	0.60	6.3	5.3	16	13	95	10.3	24	40	3.7	8.6	15.0	480	60	3	1,2,3,4,5,6,7,8,9
HP	1-15	107 PHYSICS LOUNGE	CLIMATEMASTER	TSV-006	270	215	0.40	1.3	2.6	5	4	95	9.9	4	40	3.4	4.3	15.0	277	60	1	1,2,3,4,5,6,7,8,9
HP	2-1	224 SEMINAR ROOM	CLIMATEMASTER	TZV-030	900	500	0.60	6.3	5.3	17	11	95	10.9	27	40	3.6	8.6	15.0	480	60	3	1,2,3,4,5,6,7,8,9
HP	2-2	229 SEMINAR ROOM	CLIMATEMASTER	TZV-030	780	500	0.47	6.3	5.3	14	8	95	10.9	26	40	3.6	8.6	15.0	480	60	3	1,2,3,4,5,6,7,8,9
HP	2-3	227 CLUSTER COMPUTING GROUP LAB	CLIMATEMASTER	TZV-030	720	130	0.57	6.3	5.3	14	11	95	10.8	9	40	3.6	8.6	15.0	480	60	3	1,2,3,4,5,6,7,8,9
HP	2-4	222 COMPUTER LAB 3	CLIMATEMASTER	TZV-048	1960	250	0.38	10.0	5.9	39	33	95	9.9	25	40	3.8	10.3	15.0	480	60	3	1,2,3,4,5,6,7,8,9
HP	2-5	210+212+214+216+218- OFFICES	CLIMATEMASTER	TZV-048	1850	90	0.68	10.0	5.9	28	24	95	10.9	23	40	3.7	12.7	15.0	480	60	3	1,2,3,4,5,6,7,8,9
HP	2-6	202+204+206+208- OFFICES	CLIMATEMASTER	TZV-024	960	80	0.59	5.0	9.5	18	17	95	10.7	24	40	3.5	7.6	15.0	480	60	3	1,2,3,4,5,6,7,8,9
HP	2-7	200 SCIENCE COMMONS READING ROOM	CLIMATEMASTER	TZH-060	1980	165	0.58	12.5	13.4	37	32	95	11.2	55	40	3.7	15.0	20.0	480	60	3	1,2,3,4,5,6,7,8,9
HP	2-8	201+203- OFFICES	CLIMATEMASTER	TZH-024	780	40	0.54	5.0	9.5	16	15	95	10.7	16	40	3.5	7.6	15.0	480	60	3	1,2,3,4,5,6,7,8,9
HP	2-9	209+211+213- OFFICES	CLIMATEMASTER	TZV-024	940	50	0.48	5.0	9.5	20	18	95	10.7	22	40	3.5	7.6	15.0	480	60	3	1,2,3,4,5,6,7,8,9
HP	2-10	217+219- COMPUTER LABS	CLIMATEMASTER	TZV-030	1120	300	0.42	5.0	5.3	22	16	95	10.9	11	40	3.7	8.6	15.0	480	60	3	1,2,3,4,5,6,7,8,9
HP	2-11	2ND FLOOR CORRIDOR + 221 MATH STUDIO	CLIMATEMASTER	TZH-036	1400	230	0.73	7.5	6.7	27	21	95	10.2	19	40	3.6	10.3	15.0	480	60	3	1,2,3,4,5,6,7,8,9
HP	2-12	205+207+215 OFFICES	CLIMATEMASTER	TSV-018	710	60	0.52	3.8	4.7	16	16	95	11.0	14	40	3.6	14.4	20.0	277	60	1	1,2,3,4,5,6,7,8,9
HP	2-13	225 SEMINAR ROOM	CLIMATEMASTER	TSV-009	360	270	0.40	1.9	3.6	10	10	95	10.5	5	40	3.5	7.4	15.0	277	60	1	2,3,4,5,6,7,8,9
HP	2-14	2ND FLOOR STAIR 1 CORRIDOR	CLIMATEMASTER	TSH-006	200	180	0.50	1.3	2.6	6	5	95	9.9	4	40	3.2	4.3	15.0	277	60	1	2,3,4,5,6,7,8,9
HP	3-1	319 SHARED PERSON CLASSROOM	CLIMATEMASTER	TZV-030	840	500	0.64	6.3	5.3	25	25	95	10.9	27	40	3.7	8.6	15.0	480	60	3	1,2,3,4,5,6,7,8,9
HP	3-2	316 SHARED PERSON CLASSROOM	CLIMATEMASTER	TSV-018	560	250	0.48	3.8	4.7	12	8	95	11.0	11	40	3.4	14.4	20.0	277	60	1	1,2,3,4,5,6,7,8,9
HP	3-3	315 45 PERSON CLASSROOM	CLIMATEMASTER	TZV-036	1240	750	0.60	7.5	6.7	27	21	95	10.2	19	40	3.6	10.3	15.0	480	60	3	1,2,3,4,5,6,7,8,9
HP	3-4	306+308+732- STUDY GROUPS + STUDY HALL	CLIMATEMASTER	TZV-036	1350	265	0.55	7.5	6.7	18	15	95	10.2	20	40	3.6	10.3	15.0	480	60	3	1,2,3,4,5,6,7,8,9
HP	3-5	304+310+312- STUDENT OFFICES	CLIMATEMASTER	TSV-006	280	130	0.64	1.3	2.6	5	4	95	9.9	4	40	3.4	4.3	15.0	277	60	1	2,3,4,5,6,7,8,9
HP	3-6	3RD FLOOR STAIR WINDOW	CLIMATEMASTER	TZV-030	1000	60	0.50	6.3	5.3	22	22	95	10.9	7	40	3.7	8.6	15.0	480	60	3	1,2,3,4,5,6,7,8,9
HP	3-7	300 SHARED 65 PERSON CLASSROOM	CLIMATEMASTER	TZV-060	2100	1200	0.62	12.5	13.4	44	28	95	10.8	56	40	3.6	15.0	20.0	480	60	3	1,2,3,4,5,6,7,8,9
HP	3-8	303 SCIENCE COMMONS COMPUTER LAB	CLIMATEMASTER	TZV-042	1480	365	0.52	8.8	6.4	31	24	95	10.7	21	40	3.6	10.3	15.0	480	60	3	1,2,3,4,5,6,7,8,9
HP	3-9	302 SCIENCE COMMONS LOUNGE/ STUDY	CLIMATEMASTER	TZV-060	3300	180	0.73	12.5	13.4	66	61	95	10.8	49	40	3.6	15.0	20.0	480	60	3	1,2,3,4,5,6,7,8,9
HP	3-10	318 SHARED PERSON CLASSROOM	CLIMATEMASTER	TZV-030	885	500	0.67	6.3	5.3	19	13	95	10.3	26	40	3.7	8.6	15.0	480	60	3	1,2,3,4,5,6,7,8,9
HP	3-11	314 SHARED PERSON CLASSROOM	CLIMATEMASTER	TZV-030	1200	500	0.69	6.3	5.3	22	15	95	10.2	21	40	3.7	8.6	15.0	480	60	3	1,2,3,4,5,6,7,8,9

1 ECM FAN MOTOR
2 MERV 13 FINAL FILTERS, HOSE KIT ASSEMBLIES.
3 REFRIGERANT R410A
4 COOLING CAPACITY BASED ON ENTERING AIR TEMPERATURE 76/63 DEGREE F, HEATING CAPACITY BASED ON ENTERING AIR TEMPERATURE 70 DEGREE F, 20% GLYCOL
5 INTERNAL CIRCULATION PUMP WITH ECM MOTOR TO CONTROL FLUID ΔT
6 PROVIDE DIAGNOSTIC TOOL FOR TROUBLSHOOTING (FOR MAINTENANCE CREW)- 2 PER PROJECT
7 FINAL COORDINATION OF HEAT PUMP CONNECTIONS FOR RETURN DUCT TO BE DONE PRIOR TO RELEASE
8 AVAILABLE ESP ASSUMES FULLY LOADED FILTER
9 BACNET CONTROLS, DISCONNECT SWITCH

DIFFUSERS, REGISTERS, GRILLES, AND LOUVERS

MARK	TYPE	MODEL	FRAME	DAMPER	FINISH	REMARKS
A	Supply Air	OMNI	SURFACE-MOUNTED	OPPOSED BLADE DAMPER	BAKED WHITE ENAMEL	FLAT PLAQUE 24X 24 CEILING DIFFUSER, SEE PLAN FOR SIZE.
B	Supply Air	TITUS FLOWBAR FL-20	SURFACE-MOUNTED	NONE	BAKED WHITE ENAMEL	HIGH THROW , SINGLE SLOT, 2" SLOT PROVIDE INSULATED PLENUM
C	Supply Air	TITUS S300 FL	SURFACE-MOUNTED	AIR EXTRACTOR	ALUMINUM	-
D	Exhaust Air	TITUS PAR	SURFACE-MOUNTED	OPPOSED BLADE DAMPER	BAKED WHITE ENAMEL	FLAT PLAQUE 24X24 CEILING DIFFUSER, SEE PLAN FOR SIZE
E	Return Air	TITUS PAR	SURFACE-MOUNTED	OPPOSED BLADE DAMPER	BAKED WHITE ENAMEL	FLAT PLAQUE 24X24 CEILING DIFFUSER, SEE PLAN FOR SIZE
F	Return Air	TITUS S8F	SURFACE-MOUNTED	AIR EXTRACTOR	ALUMINUM	-
G	Return Air	TITUS FLOWBAR FL-20	SURFACE-MOUNTED	NONE	BAKED WHITE ENAMEL	HIGH THROW , SINGLE SLOT, 2" SLOT PROVIDE INSULATED PLENUM
H	Return Air	TITUS 350 RL	SURFACE-MOUNTED	OPPOSED BLADE DAMPER	BAKED WHITE ENAMEL	RECTANGULAR REGISTER, 0 DEG. FIXED DEFLECTION BLADES, 1/2" SPACING, ALUMINUM. SEE PLAN FOR SIZE.
I	Exhaust Air	TITUS 350ZRL	SURFACE-MOUNTED	OPPOSED BLADE DAMPER	BAKED WHITE ENAMEL	RECTANGULAR REGISTER, 0 DEG. FIXED DEFLECTION BLADES, 1/2" SPACING, ALUMINUM. SEE PLAN FOR SIZE.
J	Supply Air	TITUS FLOWBAR FL-25	SURFACE-MOUNTED	NONE	BAKED WHITE ENAMEL	HIGH THROW , SINGLE SLOT, 2.5" SLOT PROVIDE INSULATED PLENUM

AIR SEPARATOR SCHEDULE

TAG COMMENTS	TAG MARK	LOCATION	MANUFACTURER & MODEL	MAX. FLOW (GPM)	PIPE CONNECTOR	MAX. OPERATING TEMP (F)	MAX. WORKING PRESSURE (PSIG)	REMARKS
AS	1	BASEMENT	BELL & GOSSETT ROLAIRTROL #RL-4F	300	4" FLANGED TANGENTIAL OPENING	350	125	HIGH CAPACITY AUTOMATIC AIR VENT

AIR CONDITIONING UNIT SCHEDULE

TAG COMMENTS	TAG MARK	LOCATION	AREA SERVED	NOMINAL TONS	EVAPORATOR FAN CFM	EVAPORATOR FAN FLA	COOLING COIL DATA TOTAL MBH	COOLING COIL DATA SENS. MBH	ELECTRICAL DATA MCA	ELECTRICAL DATA MOCP	ELECTRICAL DATA V/PH/HZ	MANUFACTURER	MODEL	REMARKS
AC	1	MDF ROOM	MDF ROOM	3	900	0.44	36	36	0.55	15	208/1/60	CARRIER	40QNQ036	1,2,3,4
AC	2	IDF ROOM	IDF ROOM	2	645	0.38	24	24	0.48	15	208/1/60	CARRIER	40QNQ024	1,2,3,4
AC	3	LBC ELEC. ROOM	LBC ELEC. ROOM	3	900	0.44	36	36	0.55	15	208/160	CARRIER	40QNQ036	1,2,3,4
AC	4	ELECTRICAL ROOM	ELECTIRCAL ROOM	3	900	0.44	36	36	0.55	15	208/1/60	CARRIER	40QNQ036	1,2,3,4

1 COOLING ONLY.
2 PROVIDE PIPING SIZES PER MANUFACTURERS RECOMMENDATION.
3 PROVIDE CONDENSATE PUMP.
4 R-410a REFRIGERANT TYPE

EXPANSION TANK SCHEDULE

TAG COMMENTS	TAG MARK	LOCATION	TANK TYPE	DIMENSIONS DIA (IN.)	DIMENSIONS HT (IN.)	CAPACITY (GAL.)	WORKING PRESSURE	REILIEF VALVE PRESSURE (PSI)	TANK_MAX. WT. FLOODED (LBS.)	TANK_FLUID TYPE	MANUFACTURER	MODEL	REMARKS
ET	1	BASEMENT	FREE STANDING	36	63	211	0	0	2300	20% PG	WESSELS	NLA 800L	1

1 VERTICAL ASME RATED PRECHARGED DIAPHRAGM TYPE PRESSURE VESSEL, HEAVY DUTY BUTYL RUBBER DIAPHRAGM, CARBON STEEL.

CONDENSING UNIT SCHEDULE

TAG COMMENTS	TAG MARK	LOCATION	UNIT SERVED	AMB. TEMP (F)	CONDENSER FAN QTY	ELECTICAL MCA	ELECTICAL MOCP	ELECTICAL V/ P/ HZ	UNIT WEIGHT (LBS)	MANUFACTURER	MODEL	REMARKS
CU	1	ROOF	AC-1	95	1	23.8	40	208/1/60	250	CARRIER	38QRF036	1,2,3
CU	2	ROOF	AC-2	95	1	16.8	25	208/1/60	176	CARRIER	38QRF024	1,2,3
CU	3	LBC ELEC. RM	AC-3	95	1	23.8	40	208/1/60	250	CARRIER	38QRF036	1,2,3
CU	4	ROOF	AC-4	95	1	23.8	40	208/1/60	250	CARRIER	38QRF036	1,2,3

1 LOW AMBIENT KIT TO -20F
2 PROVIDE HOT GAS BYPASS WHERE/WHEN ALLOWED BY ASHRAE 90.1 -2010
3 NEMA 3R DISCONNECT

BOILER SCHEDULE

TAG COMMENTS	TAG MARK	MANUFACTURER	MODEL	LOCATION	BOILER TYPE	GAS TYPE	INLET GAS PRES. IN.	CAPACITY IMPUT (MBH)	CAPACITY OUTPUT (MBH)	EWT (F)	LWT (F)	FLUID	MAX. FLOW RATE (GPM)	MAX. OPERATING TEMP. (°F)	MAX. WORKING PRES. (PSI)	MAX. PRESSURE DROP (FT HD)	REILEF VALVE SETTING	VOLTAGE /PHASE	AMPS	OPERATING WEIGHT (LBS)	REMARKS
B	1	LOCHINVAR	KBN601	BASEMENT	CONDENSING	NATURAL	4"	560	490	110	140	20% PROP. GLYCOL	40	190	160	20	50	120/1	8.8	400	ALL
B	2	LOCHINVAR	KBN601	BASEMENT	CONDENSING	NATURAL	4"	560	490	110	140	20% PROP. GLYCOL	40	190	160	20	50	120/1	8.8	400	ALL

1 PROVIDE WITH SOILD STATE CONTROL PANEL & COMMUNICATION INTERFACE.
2 PROVIDE BOILER MANAGEMENT SYSTEM.
3 STAINLESS STEEL HEAT EXCHANGER, 5:1 TURNDOWN RATIO, AIR/FUEL METERING VALVE, GAS PRESSURE REGULATOR, AND FLUE GAS CONDENSATE TRAP.
4 DISCONNECT SWITCH, SINGLE POINT CONNECTION.
5 FLUE GAS CONDENSATE NEUTRALIZTATION KIT.
6 BOILER FLUE LAYOUT TO BE REVIEWED AND APPROVED BY THE BOILER MANUFACTURER.
7 50 PSI SAFETY RELIEF VALVE SETTING, ELECTRONIC LOW WATER CONTROL
8 PROVIDE AL29-4C STAINLESS STEEL FLUES

GLYCOL FILL STATION SCHEDULE

TAG COMMENTS	TAG MARK	MANUFACTURER & MODEL	SERVICE	REMARKS
GFS	1	WESSELS GMP-13050	GX SYSTEM	50 GALLON (42"X28") 50 GALLON VERTICAL STORAGE TANK, 10-50 PSI PUMP W/ 1/3 HP MOTOR. 110V, 1Φ, 60 HZ. REFER TO PIPING DETAILS ON SHEET M600. PROVIDE DISCONNECT SWITCH

boora

Boora Architects Inc.
720 SW Washington Suite 800
Portland, OR 97205
T. 503.226.1575 F. 503.241.7429
www.boora.com

dbHMS
design build engineering
303 W. Erie Street, Suite 510 Chicago, IL 60654
office: 312.915.0557
fax: 312.915.0558
website: www.dbhms.com

BENJAMIN RUBACH REGISTERED No. PE11100371 STATE OF INDIANA PROFESSIONAL ENGINEER

Earlham College Science Complex
Phase 2
801 National Road West
Richmond, IN 47374-4095

MARK	DATE	DESCRIPTION
2	01.24.2014	Addendum 3
1	01.15.2014	Addendum 2

Issued: February 28 , 2014
Scale: NTS

Copyright

CONFORMED SET

MECHANICAL SCHEDULES

M501

2/26/2014 1:49:53 PM

ELECTRIC CABINET UNIT HEATER SCHEDULE

TAG					MOUNTING			MOTOR						
COMMENTS	MARK	MANFACTURER	MODEL	LOCATION	MOUNTING LOCATION	MOUNTING TYPE	CABINET ORIENTATION	AMP	VOLT	PHASE	TOTAL KW	BTU/HR	DISCHARGE AIR TEMP.	REMARKS
ECH	1A	QMARK	CDF-557	VESTIBULE 100A	CEILING	RECESSED	HORIZONTAL	18.1	277	1	5	17.1	60	1,2,3,4
ECH	1B	QMARK	CDF-557	VESTIBULE 100A	CEILING	RECESSED	HORIZONTAL	18.1	277	1	5	17.1	60	1,2,3,4
ECH	2A	QMARK	CDF-557	VESTIBULE 100B	CEILING	RECESSED	HORIZONTAL	18.1	277	1	5	17.1	60	1,2,3,4
ECH	2B	QMARK	CDF-557	VESTIBULE 100B	CEILING	RECESSED	HORIZONTAL	18.1	277	1	5	17.1	60	1,2,3,4
ECH	3	QMARK	CU945	STAIR 712	WALL	RECESSED	VERTICAL	13	480	3	10	34130	60	1,2,3,4
ECH	4	QMARK	CU935	WOMEN 333	CEILING	RECESSED	HORIZONTAL	3	480	3	2	6826	60	1,2,3,4,5
ECH	5	QMARK	CU935	MEN 332	CEILING	RECESSED	HORIZONTAL	3	480	3	2	6826	60	1,2,3,4,5

1 DISCONNECT SWITCH
2 INTEGRAL THERMOSTAT
3 COLOR BY ARCHITECT
4 ALUMINUM GRILLE
5 PROVIDE KEYLOCK FOR FRONT COVER WITH TOOLHEAD KEYLOCK STYLE SPRING LATCHES

EXHAUST FAN SCHEDULE

TAG					S.P. IN W.G.	FAN DATA				MOTOR				EMERGENCY POWER			UNIT WT. LBS.	
COMMENTS	MARK	LOCATION	SERVICE	CFM		FAN TYPE	CLASS	RPM	DRIVE	HP	VOLT	PH	HZ		MANUFACTURER	MODEL		REMARKS
EF	1	ROOF	RESTROOMS AND JANITORS CLOSETS	1425	0.75	CENTRIFUGAL	-	1187	BELT	1/2	115	1	60	-	GREENHECK	GB-141-5	106	1,2,3,4,5
EF	2	FIRST FLOOR	COFFEE BAR	150	0.25	-	-	1400	-	180 WATTS	115	1	60	-	GREENHECK	SP-A190	20	9,10,11,12,13,14,15
SEF	1	ROOF	SMOKE EXHAUST	7000	0.75	CENTRIFUGAL	-	602	BELT	2	460	3	60	YES	GREENHECK	CUBE-300-20	255	1,2,3,4,5,6,7,8

1 PROVIDE ROOF CURB
2 PREMIUM EFFECIENCY MOTOR EXCEEDING NEMA 1210, NEMA-1 DISCONNECT, BEARINGS WITH GREASE FITTINGS.
3 PROVIDE NEMA 3R DISCONNECT
4 PROVIDE 24V MOTORIZED DAMPER WITH END SWITCH
5 ALUMINUM BIRDSCREEN
6 UL LISTING FOR SMOKE EXHAUST
7 HEAT BAFFLE
8 STEEL WHEEL MATERIAL
9 ENERGY STAR RATED
10 COORDINATE GRILLE TYPE & COLOR WITH ARCHITECT
11 PROVIDE WALL-MOUNTED MOTION DETECTOR WITH ADJUSTABLE TIMER
12 PROVIDE ELBOW DISCHARGE WITH ALUMINUM GRILLE
13 MOTORIZED BACKDRAFT DAMPER
14 UL/cUL 507 LISTED
15 POLYPROPYLENE WHEEL MATERIAL

DEDICATED OUTSIDE AIR UNIT SCHEDULE

TAG					SUPPLY FAN					EXHAUST FAN					COOLING COIL						HEATING COIL						ELECTRICAL							
COMMENTS	MARK	LOCATION	CFM	MIN. OA CFM	ESP (IN)	TOTAL SP (IN)	FAN SPEED RPM	# OF FANS	HP EACH	ESP (IN)	TOTAL SP (IN)	FAN SPEED RPM	# OF FANS	HP EACH	CAP TMBH	SOURCE EWT (F)	SOURCE LWT (F)	SOURCE P.D.	SOURCE GPM	EER	CAP. SMBH	SOURCE EWT (F)	HEATING SOURCE EWT (F)	SOURCE P.D.	SOURCE GPM	COP	MCA (A)	MOCP (A)	V / PH / HZ	FILTER TAG	ENERGY RECOVERY WHEEL TAG	UNIT WEIGHT (LBS)	MANUFACTURER	MODEL	REMARKS
DOA	1	BASEMENT	10000	10000	3.00	7.49	1760	2	9	1.5	3.61	1750	2	5	422.68	95	106	25.1	98	15.5	373.36	40	33.4	25.1	98	5.7	103	125	460/3/60	FF-1, FF-2	ERV B-1	13100	VENMAR CES	W-2-10I-WW-X-X-HP302-G	1

1 OUTSIDE AIR MONITORING STATION, 3-WAY FACTORY MOUNTED WATER VALVE, FREEZE-STAT.
2 TEFC FAN MOTORS, VFD FAN CONTROL. SEE UNIT DETAIL ON SHEET M604-1
3 COOLING CAPACITY BASED ON ENTERING AIR TEMPERATURE 80/67 DEGREE F, HEATING CAPACITY BASED ON ENTERING AIR TEMPERATURE 41 DEGREE F, 20% GLYCOL IN GROUND LOOP
4 SINGLE POINT ELECTRICAL CONNECTION
5 R-410A REFRIGERANT
6 PRE-FILTERS - 2" MERV-8, FINAL FILTERS - 4" MERV-13, SEE UNIT DETAIL ON SHEET M604 FOR LOCATIONS
7 COORDINATE WITH MANUFACTURER FOR UNIT DETAILS PER DUCTWORK LAYOUT
8 PROVIDE SEPERATE 120V CIRCUIT FOR INTERIOR LIGHTING

FILTER SCHEDULE

TAG	FILTER DESCRIPTION	CFM	MERV RATING	FILTER TYPE	FACE AREA SQ. FT.	FACE VEL FPM	24 X 24 (QTY.)	P.D. DROP (IN WC)		SYSTEM DESIGN PD (IN WC)	MANUFACTURER	REMARKS
				CARTRIDGE				CLEAN	DIRTY			
PF-1	PREFILTER	10000	8	2"	24	450	6	0.3	1	0.6	AAF PERFECT PLEAST M8	
FF-2	FINAL	10000	14	4"	24	450	6	0.6	1.5	1.5	AFF VARICEL II	
PF-2	EXHAUST PREFILTER	10000	8	2"	24	450	6	0.3	1	0.6	AAF PERFECT PLEAST M8	

ENERGY RECOVERY WHEEL PERFORMANCE SCHEDULE

TAG	LOCATION	AREA SERVED	CFM	OA CFM	SUMMER CONDITION - OA				SUMMER RA CFM	SUMMER CONDITION - RA				SUMMER APD (IN W.G.)	WINTER CONDITION -OA				WINTER RA CFM	WINTER CONDITION - RA				WINTER APD IN/WG	WHEEL SPEED (RPM)	WHEEL MOTOR POWER (HP)	ELECTRICAL				UNIT WEIGHT	MANUFACTURER	MODEL	REMARKS
					ENTERING		LEAVING			ENTERING		LEAVING			ENTERING		LEAVING			ENTERING		LEAVING					VOLTS	PH	F.L. AMPS	HZ				
					DEG. F. (DB)	DEG. F. (WB)	DEG. F. (WB)	DEG. F. (DB)		DEG. F. (DB)	DEG. F. (WB)	DEG. F. (DB)	DEG. F. (WB)		DEG. F. (DB)	DEG. F. (WB)	DEG. F. (DB)	DEG. F. (WB)		DEG. F. (DB)	DEG. F. (WB)	DEG. F. (DB)	DEG. F. (WB)											
ERW B-1	DOA-1	ENTIRE BUILDING	10000	10000	95	75	81.4	67.9	10000	75	62.5	88.6	70.4	1.01	-10	-10	44.3	38.3	10000	70	54.6	15.7	15.7	1.01	20	0.33	460	3	0.6	60	768	INNERGYTECH	I3-MS3A-70	ALL

1 UNIT INTERNAL TO DOA-1
2 PROVIDE OUTSIDE AIRFLOW MEASUREMENT PORT AT EACH WHEEL
3 ELECTRICAL CONNECTIONS PROVIDED WITH IN DOA-1
4 VARIABLE WHEEL SPEED

SOUND DATA SCHEDULE

TAG		SOUND LEVEL (dBA) FOR EACH OCTAVE BAND FREQUENCY (Hz)								TOTAL (dBA) AT 10 FT.	REMARKS
		63	125	250	500	1000	2000	4000	8000		
SUPPLY	INLET	98	94	94	92	84	82	82	75	93	1
FAN	OUTLET	83	81	93	82	78	77	74	68	87	1
EXHAUST FAN	INLET	91	89	88	86	79	78	77	69	87	1
	OUTLET	77	75	87	75	72	71	67	60	81	1
DOA-1 RADIATED	CABINET	86	80	76	68	61	60	58	51	72	1
	FLOOR	80	78	70	52	43	37	35	35	65	1

1 TOTAL SOUND POWER LEVEL FROM INTERMAL COMPONENTS (A WEIGHTED) AT AN ESTIMATED DISTANCE OF 10FT FROM UNIT

PUMP SCHEDULE

WT	MARK	LOCATION	SERVICE	TYPE	FLUID TYPE	FLOW RATE (GPM)	PUMP HEAD (FT.)	MOTOR DATA					MANUFACTURER	SERIES	MODEL	REMARKS
								BRAKE POWER (HP)	MOTOR POWER (HP)	VOLTAGE (V)	PHASE	FREQUENCY (HZ)				
BWP	1	MECHANICAL ROOM	BOILER	IN-LINE	20% PG	40	20	0.54	0.75	460	3	60	BELL & GOSSETT	60	1-1/2X5-1/4	2
BWP	2	MECHANICAL ROOM	BOILER	IN-LINE	20% PG	40	20	0.54	0.75	460	3	60	BELL & GOSSETT	60	1-1/2X5-1/4	2
GLP	1	MECHANICAL ROOM	GX	CENTRIFUGAL	20% PG	270	118	19.12	20.00	460	3	60	BELL & GOSSETT	1510	3E	1,2,3
GLP	2	MECHANICAL ROOM	GX	CENTRIFUGAL	20% PG	270	118	19.12	20.00	460	3	60	BELL & GOSSETT	1510	3E	1,2,3

1 VARIABLE FREQUENCY DRIVE
2 HIGH TEMPERATURE SEALS
3 VIBRATION ISOLATION BASE

boora

Boora Architects Inc.
720 SW Washington Suite 800
Portland, OR 97205
T. 503.226.1575 F. 503.241.7429
www.boora.com

dbHMS
design build engineering
303 W. Erie Street, Suite 510 Chicago, IL 60654
office: 312.915.0557
fax: 312.915.0558
website: www.dbhms.com

BENJAMIN RUBACH REGISTERED No. PE11100371 STATE OF INDIANA PROFESSIONAL ENGINEER

Earlham College Science Complex
Phase 2
801 National Road West
Richmond, IN 47374-4095

MARK	DATE	DESCRIPTION
2	01.24.2014	Addendum 3
1	01.15.2014	Addendum 2

Issued: February 28 , 2014
Scale: NTS

Copyright

CONFORMED SET

MECHANICAL SCHEDULES

M502

2/26/2014 1:50:15 PM

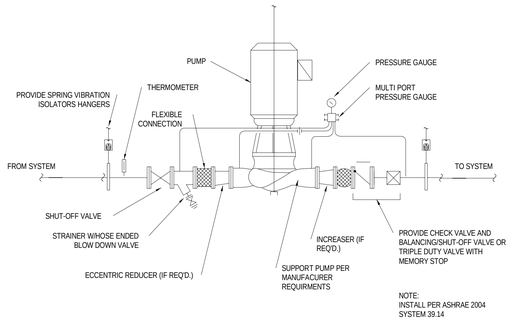

9 TYPICAL IN-LINE PUMP DETAIL

DETAIL IS NOT TO SCALE

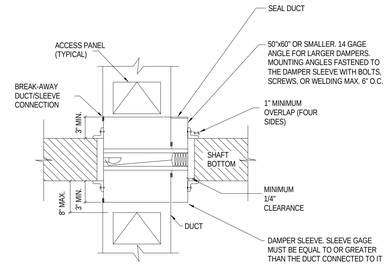

8 TYPICAL FIRE DAMPER IN SHAFT BOTTOM

DETAIL IS NOT TO SCALE

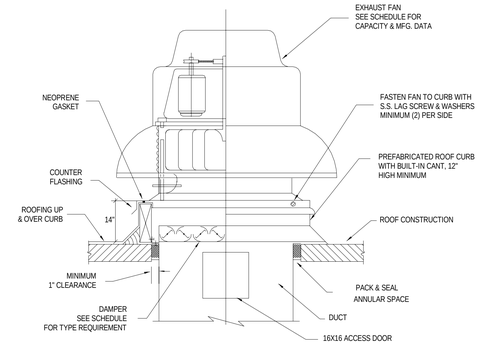

NOTES:

1. FOR CONSTRUCTION WITH INSULATION ABOVE ROOF SLAB, DECK, ETC. SUPPORT CURB DIRECTLY ON ROOF STRUCTURE.
2. COORDINATION INSTALLATION OF ROOF CURB WITH LANDLORD'S ROOFING CONTRACTOR TO MAINTAIN WARRANTY.

7 ROOF EXHAUST DETAIL

DETAIL IS NOT TO SCALE

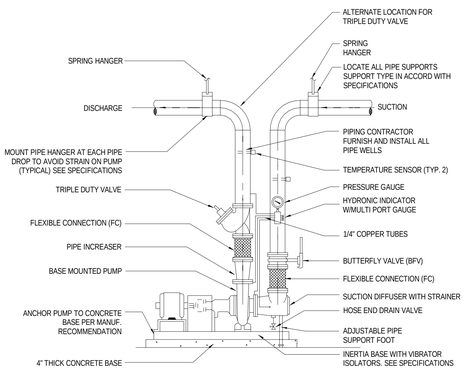

6 BASED MOUNTED PUMP DETAIL

DETAIL IS NOT TO SCALE

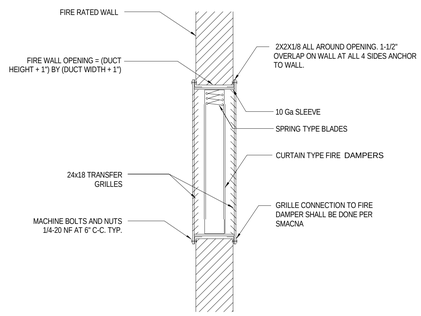

5 TYPICAL AIR TRANSFER GRILLE OPENING WITH FIRE DAMPER

DETAIL IS NOT TO SCALE

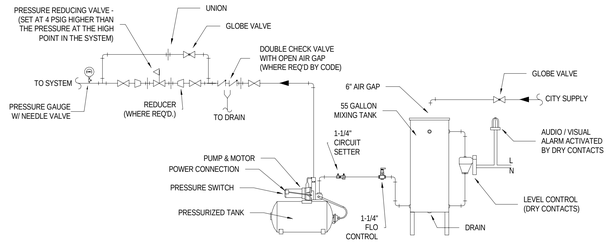

NOTES:

1. 55 GALLON GALVANIZED VERTICAL SURGE TANK, VENTED TO THE ATMOSPHERE, HAVING REINFORCED TOP EDGE AND A HINGED REMOVABLE COVER, ALL SUPPORTED ON 12" HIGH ANGLE LEGS.

2. WATER FEED MAKE-UP ASSEMBLY FOR FIELD MOUNTING TO ALLOW AN OPEN BREAK BETWEEN THE MUNICIPAL SUPPLY AND THE SURGE TANK. PIPING SHALL BE 1" FOR EQUALIZING CONNECTIONS AND 1/2" TO MUNICIPAL SUPPLY.

3. SELF-PRIMING CENTRIFUGAL PUMP, MOUNTED ON 30 GALLON GALVANIZED HORIZONTAL PRESSURIZATION TANK, EQUIPPED WITH AUTOMATIC, AIR VOLUME CONTROL AND TWO-POLE PRESSURE SWITCH. INTERCONNECTED PIPING FROM SURGE TANK TO PUMP INLET SHALL BE FIELD CONNECTED USING 1-1/4" PIPE.

4. FLOW BALANCING VALVE (1-1/4") AND BACK FLOW CHECK VALVE (1-1/4") FOR FIELD MOUNTING BETWEEN THE SURGE TANK AND PRESSURIZATION PUMP.

4 GLYCOL FILL STATION DETAIL

DETAIL IS NOT TO SCALE

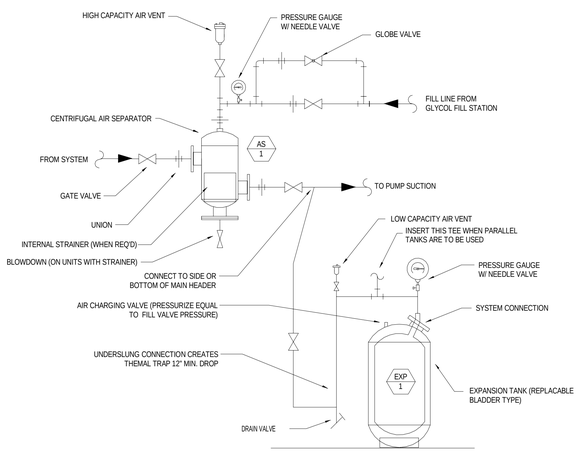

3 BLADDER TYPE EXPANSION TANK & AIR SEPARATOR DETAIL

DETAIL IS NOT TO SCALE

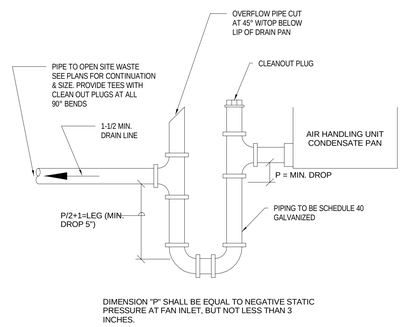

2 CONDENSATE DRIP PAN PIPING DETAIL FOR INDOOR USE

DETAIL IS NOT TO SCALE

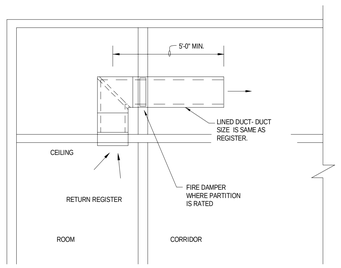

1 RETURN DUCT-TYPICAL

DETAIL IS NOT TO SCALE

boora

Boora Architects Inc.
720 SW Washington Suite 800
Portland, OR 97205
T. 503.226.1575 F. 503.241.7429
www.boora.com

dbHMS
design build engineering
303 W. Erie Street, Suite 510 Chicago, IL 60654
office: 312.915.0557
fax: 312.915.0558
website: www.dbhms.com

BENJAMIN RUBACH REGISTERED No. PE11100371 STATE OF INDIANA PROFESSIONAL ENGINEER

Earlham College Science Complex
Phase 2
801 National Road West
Richmond, IN 47374-4095

MARK	DATE	DESCRIPTION

Issued: February 28 , 2014
Scale: NTS

Copyright

CONFORMED SET

MECHANICAL DETAILS

M600

2/26/2014 1:50:18 PM

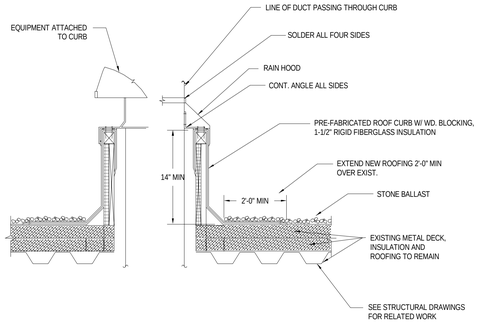

9 ROOF CURB DETAIL

DETAIL IS NOT TO SCALE

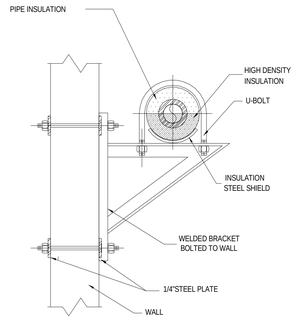

8 WALL PIPE SUPPORT DETAIL

DETAIL IS NOT TO SCALE

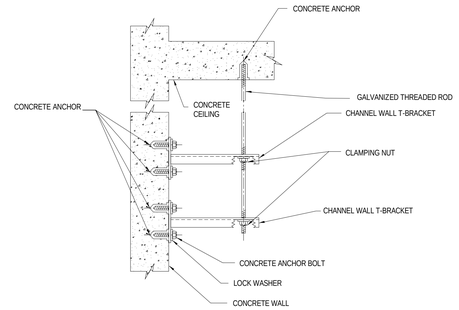

7 WALL PIPE SUPPORT DETAIL

DETAIL IS NOT TO SCALE

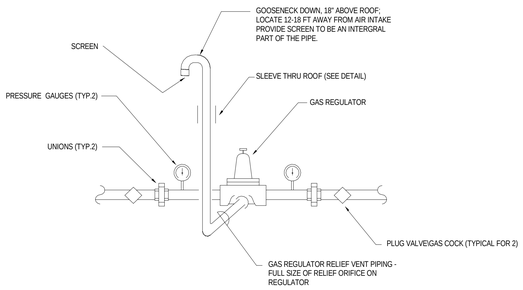

6 N.G. PRESSURE REDUCING STATION DETAIL

DETAIL IS NOT TO SCALE

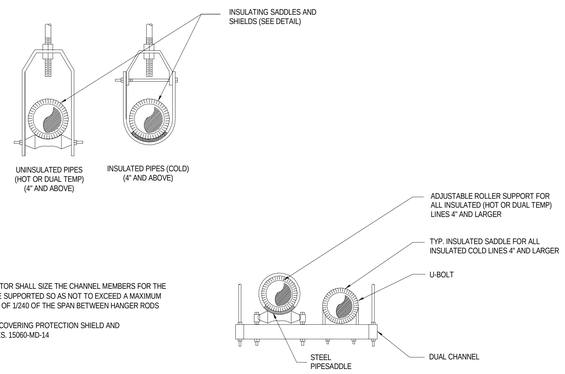

NOTE:
1. CONTRACTOR SHALL SIZE THE CHANNEL MEMBERS FOR THE LOADS TO BE SUPPORTED SO AS NOT TO EXCEED A MAXIMUM DEFLECTION OF 1/240 OF THE SPAN BETWEEN HANGER RODS

2. SEE PIPE COVERING PROTECTION SHIELD AND PIPE SADDLES. 15060-MD-14

5 PIPE SUPPORT AND HANGER DETAIL

DETAIL IS NOT TO SCALE

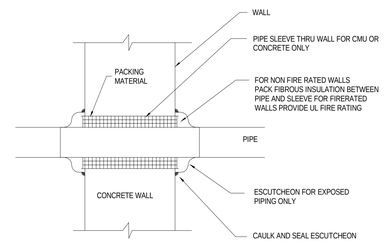

NOTE:
1. PIPE SHALL BE SUPPORTED ON EITHER SIDE OF WALL. PIPE SUPPORT SHALL BE COMPLETELY INDEPENDENT OF WALL.

4 PIPE THROUGH WALL DETAIL

DETAIL IS NOT TO SCALE

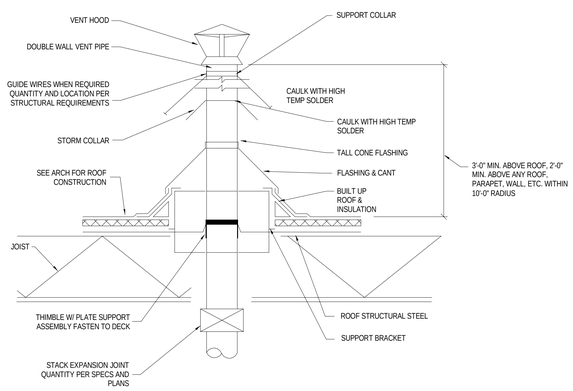

3 BOILER STACK THRU ROOF DETAIL

DETAIL IS NOT TO SCALE

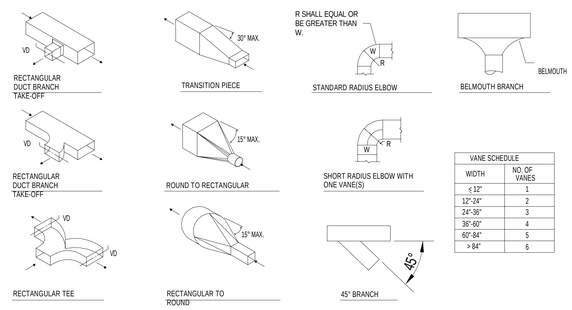

VANE SCHEDULE	
WIDTH	NO. OF VANES
≤ 12"	1
12"-24"	2
24"-36"	3
36"-60"	4
60"-84"	5
> 84"	6

NOTES:

1. PROVIDE STANDARD RADIUS ELBOWS WHEN POSSIBLE - SHORT RADIUS WHERE REQUIRED.
2. ALL SHORT RADIUS ELBOWS SHALL HAVE VANES. VANES SHALL BE CONSTRUCTED, SUPPORTED, & FASTENED AS RECOMMENDED BY SMACNA.
3. NO SQUARE OR RECTANGULAR HEEL ELBOWS SHALL BE ALLOWED, WITHOUT TURNING VANES.
4. NO SPIN-IN CONNECTIONS SHALL BE ALLOWED. 5. FOR RADIUS ELBOWS, IF R IS LESS THAN W, THEN FULL ARC TURNING VANE(S) SHALL BE PROVIDED, SEE THE VANE SCHEDULE. THE INSIDE BEND MAY BE SQUARE FOR W > 12" ,

2 TYPICAL DUCT DETAIL

DETAIL IS NOT TO SCALE

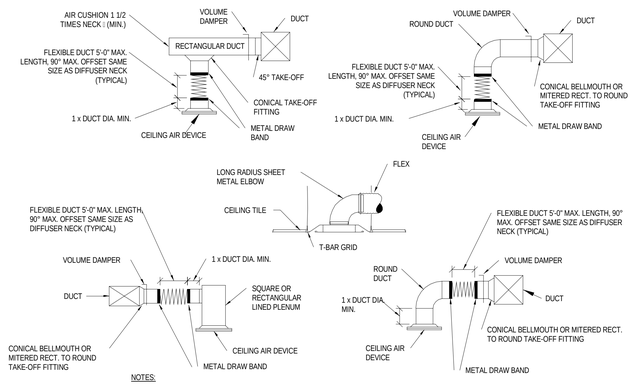

NOTES:

1. SPIN COLLARS SHALL NOT BE PERMITTED.
2. SPECIAL CONDITIONS THAT CAN NOT MEET ONE OF THESE STANDARDS SHALL BE BROUGHT TO THE ENGINEER'S ATTENTION ON A CASE BY CASE BASIS.
3. DETAILS ILLUSTRATE INSTALLATION WITH ROUND NECK DIFFUSERS AND DUCTS. SQUARE OR RECTANGULAR NECK DIFFUSERS AND DUCTS SHALL BE SIMILAR.

1 TYPICAL AIR DEVICE (INLET/OUTLET) INSTALLATION

DETAIL IS NOT TO SCALE

boora

Boora Architects Inc.
720 SW Washington Suite 800
Portland, OR 97205
T. 503.226.1575 F. 503.241.7429
www.boora.com

dbHMS
design build engineering
303 W. Erie Street, Suite 510 Chicago, IL 60654
office: 312.915.0557
fax: 312.915.0558
website: www.dbhms.com

BENJAMIN RUBACH REGISTERED No. PE11100371 STATE OF INDIANA PROFESSIONAL ENGINEER

Earlham College Science Complex
Phase 2
801 National Road West
Richmond, IN 47374-4095

MARK	DATE	DESCRIPTION

Issued: February 28 , 2014
Scale: NTS

Copyright

CONFORMED SET

MECHANICAL DETAILS

M601

2/26/2014 1:50:21 PM

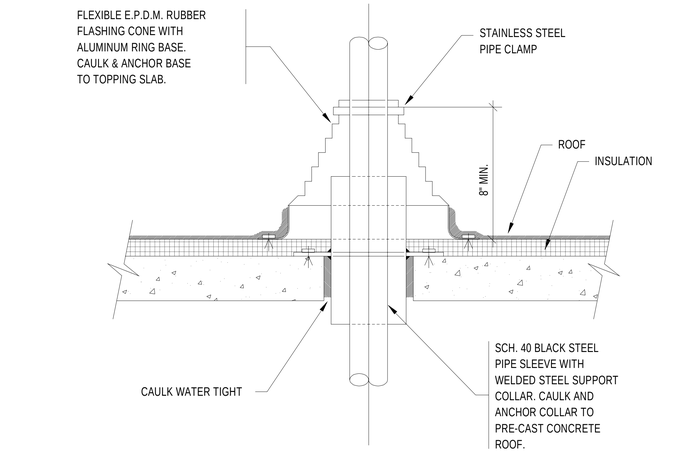

9 SINGLE PIPE ROOF PENETRATION DETAIL

DETAIL IS NOT TO SCALE

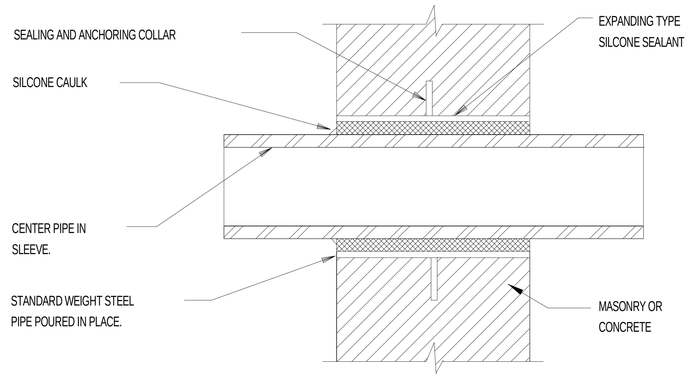

8 PIPE THRU NEW EXTERIOR WALL ABOVE GRADE

DETAIL IS NOT TO SCALE

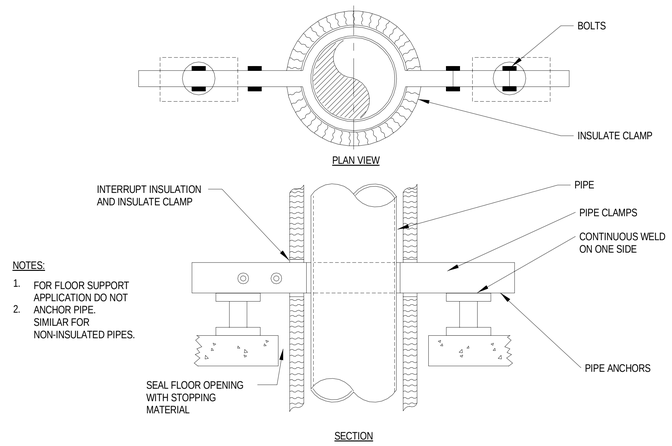

NOTES:

1. FOR FLOOR SUPPORT APPLICATION DO NOT ANCHOR PIPE. SIMILAR FOR NON-INSULATED PIPES.

7 PIPER ANCHOR/ FLOOR SUPPORT DETAIL

DETAIL IS NOT TO SCALE

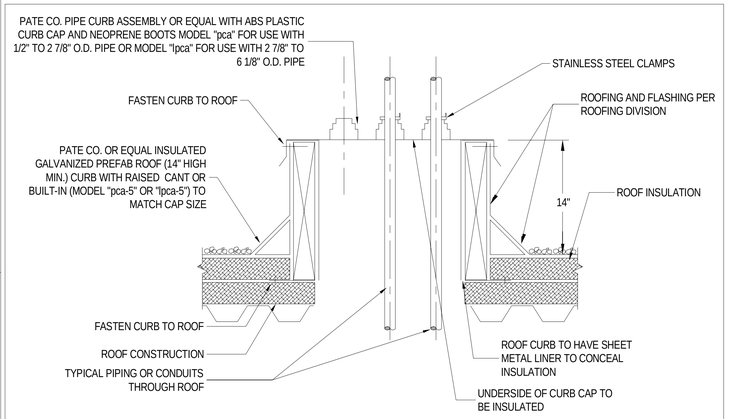

NOTE:
ROOF CURBS TO MATCH ROOF SLOPE OR SHIM LEVEL AS REQUIRED

6 PIPE PORTAL DETAIL

DETAIL IS NOT TO SCALE

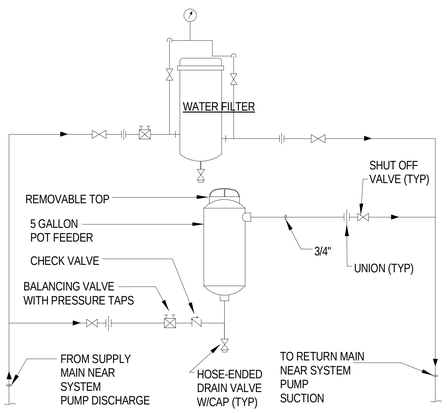

1. POT FEEDER AND WATER FILTER WILL BE SUPPORTED FROM THE FLOOR OR WALL.

5 POT FEEDER & FILTER PIPING DETAIL

DETAIL IS NOT TO SCALE

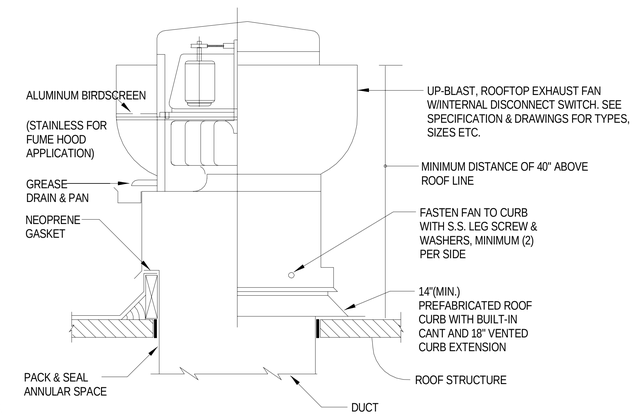

NOTES:

1. FOR CONSTRUCTION WITH INSULATION ABOVE ROOF SLAB, DECK ETC., SUPPORT CURB DIRECTLY ON ROOF STRUCTURE.

4 UPBLAST EXHAUST FAN DETAIL

DETAIL IS NOT TO SCALE

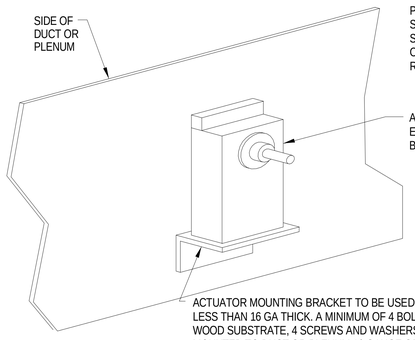

ACTUATOR MOUNTING BRACKET TO BE USED AND BOLTED TO DUCT WITH A METAL GAUGE OF NOT LESS THAN 16 GA THICK. A MINIMUM OF 4 BOLTS SHALL BE USED FOR MOUNTING. IF MOUNTED TO A WOOD SUBSTRATE, 4 SCREWS AND WASHERS SHALL BE USED. WHERE BRACKET CANNOT BE MOUNTED TO DUCT OR PLENUM 16 GAUGE OR HEAVIER PROVIDE SEPARATE SUPPORT FOR ACTUATOR MOUNTING BRACKET CONSISTING OF ANGLE OR CHANNEL FRAMING. ALL SCREW HOLES ON THE ACTUATOR MOUNTING PLATE SHALL BE UTILIZED. ACTUATORS SHALL NOT BE LOCATED IN ENVIRONMENTS WHICH EXCEED 100 DEGREES SUCH AS HOT DECK SECTIONS OR DIRECTLY ADJACENT TO STEAM COILS, NOR SHALL THEY BE LOCATED IN UNHEATED ENVIRONMENT UNLESS SPECIFICALLY RATED FOR SUCH DUTY.

3 DAMPER ACTUATOR DETAIL

DETAIL IS NOT TO SCALE

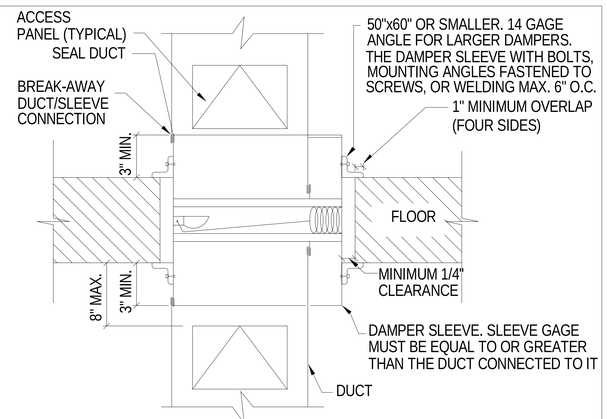

NOTE:
DUCT ACCESS PANEL DIMENSIONS SHALL BE THE DUCT WIDTH MINUS 2" WITH THE MAXIMUN WIDTH OF 24" AND THE HEIGHT TO BE 12"

2 TYPICAL FIRE DAMPER IN FLOOR

DETAIL IS NOT TO SCALE

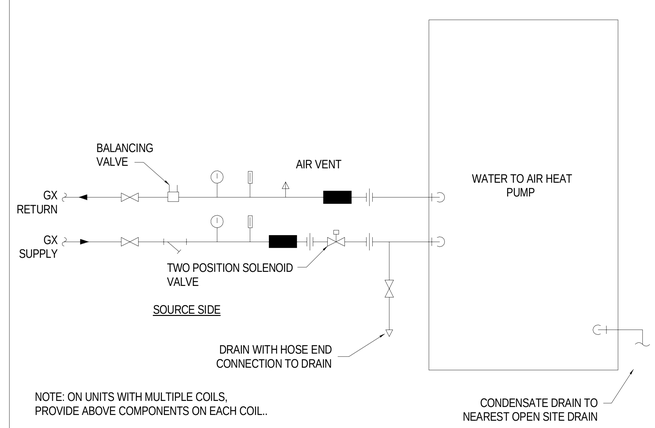

NOTE: ON UNITS WITH MULTIPLE COILS, PROVIDE ABOVE COMPONENTS ON EACH COIL..

1 WATER TO AIR HEAT PUMP

DETAIL IS NOT TO SCALE

boora

Boora Architects Inc.
720 SW Washington Suite 800
Portland, OR 97205
T. 503.226.1575 F. 503.241.7429
www.boora.com

dbHMS
design build engineering
303 W. Erie Street, Suite 510 Chicago, IL 60654
office: 312.915.0557
fax: 312.915.0558
website: www.dbhms.com

BENJAMIN RUBACH REGISTERED No. PE11100371 STATE OF INDIANA PROFESSIONAL ENGINEER

Earlham College Science Complex
Phase 2

801 National Road West
Richmond, IN 47374-4095

MARK	DATE	DESCRIPTION

Issued: February 28 , 2014
Scale: NTS

Copyright

CONFORMED SET

MECHANICAL DETAILS

M602

2/26/2014 1:50:25 PM

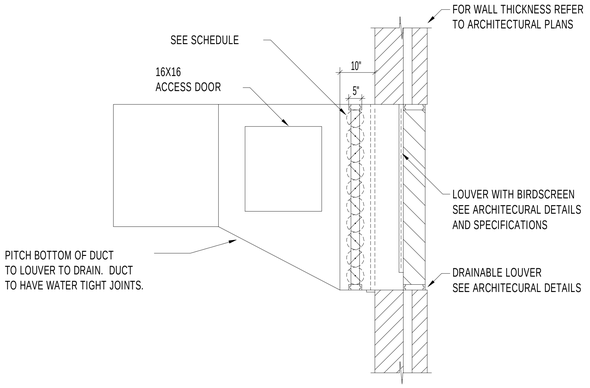

6 EXTERIOR WALL DAMPER DETAIL

DETAIL IS NOT TO SCALE

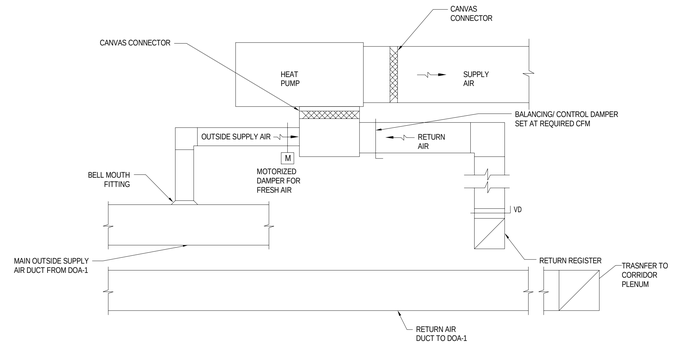

1. COORDINATE LOCATION OF HP DISCONNET WITH SHEET METAL TO ALLOW PROPER ACCESS TO ALL COMPONENTS

5 HORIZONTAL HEAT PUMP DETAIL (PLAN VIEW)

DETAIL IS NOT TO SCALE 2

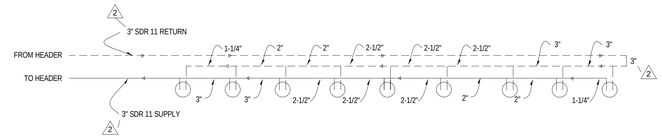

4 TYPICAL BORE HOLE GEO EXCHANGE CIRCUIT

DETAIL IS NOT TO SCALE

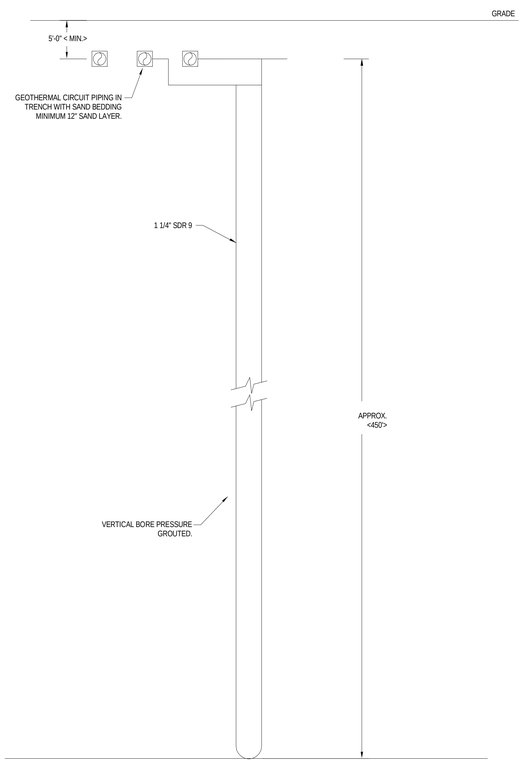

3 TYPICAL EXCHANGE WELL

DETAIL IS NOT TO SCALE

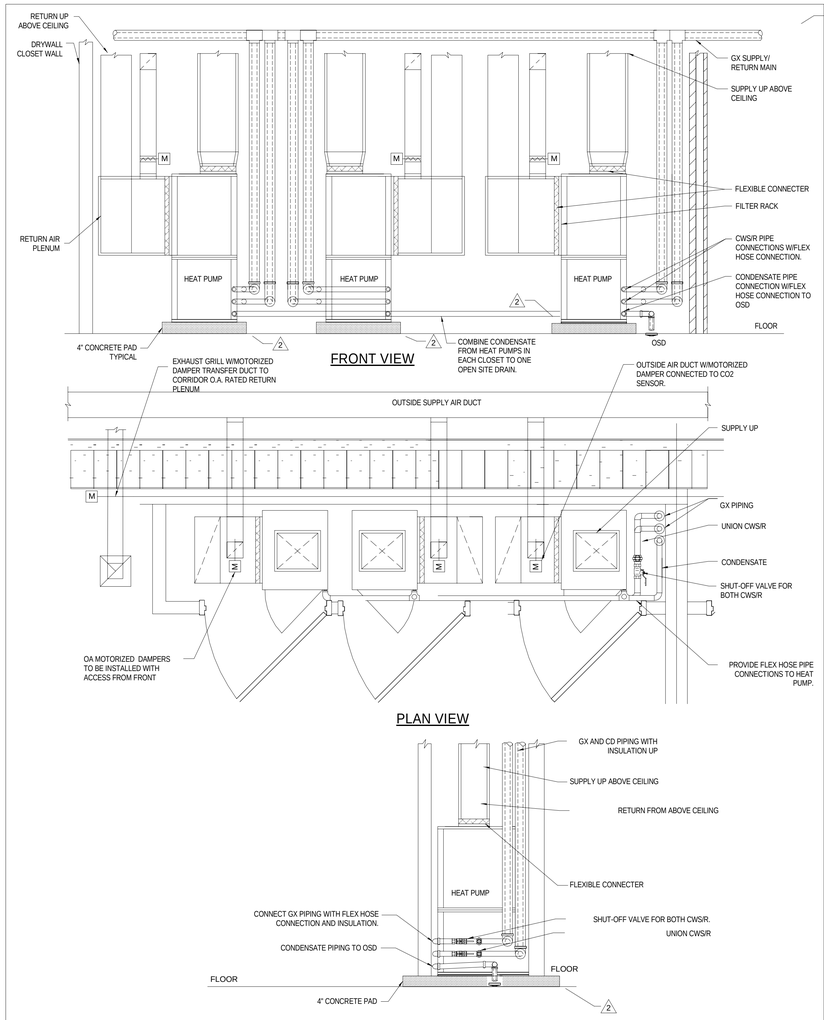

1. COORDINATE LOCATION OF HP DISCONNET WITH SHEET METAL TO ALLOW PROPER ACCESS TO ALL COMPONENTS

2 VERTICAL HEAT PUMP DETAIL (MULTIPLE HEAT PUMPS IN ONE CLOSET)

DETAIL IS NOT TO SCALE

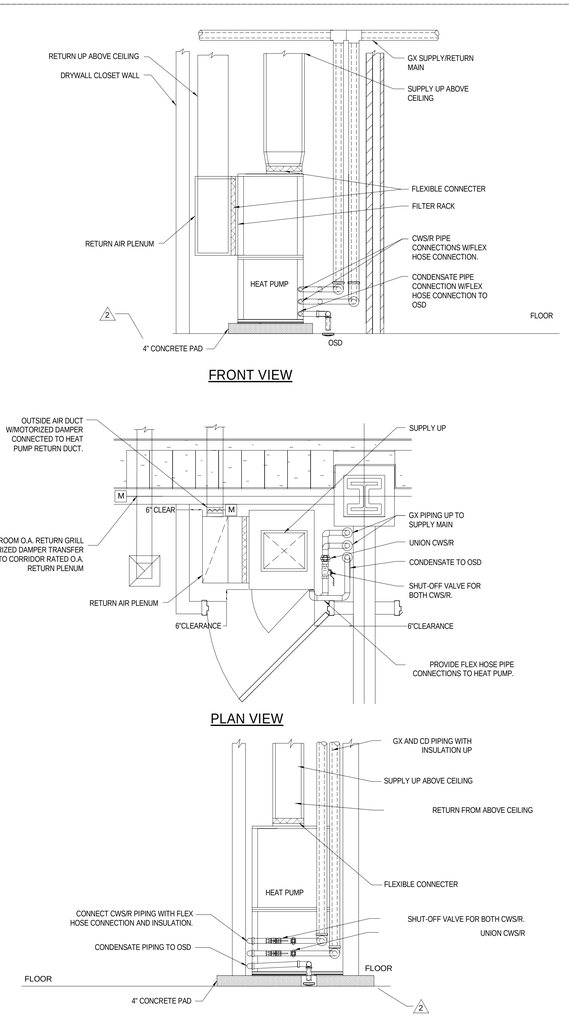

1. COORDINATE LOCATION OF HP DISCONNET WITH SHEET METAL TO ALLOW PROPER ACCESS TO ALL COMPONENTS

1 VERTICAL HEAT PUMP DETAIL

DETAIL IS NOT TO SCALE

boora

Boora Architects Inc.
720 SW Washington Suite 800
Portland, OR 97205
T. 503.226.1575 F. 503.241.7429
www.boora.com

dbHMS
design build engineering
303 W. Erie Street, Suite 510 Chicago, IL 60654
office: 312.915.0557
fax: 312.915.0558
website: www.dbhms.com

BENJAMIN RUBACH REGISTERED No. PE11100371 STATE OF INDIANA PROFESSIONAL ENGINEER

Earlham College Science Complex
Phase 2

801 National Road West
Richmond, IN 47374-4095

MARK	DATE	DESCRIPTION
2	01.24.2014	Addendum 3

Issued: February 28 , 2014

Scale: NTS

Copyright

CONFORMED SET

MECHANICAL DETAILS

M603

2/26/2014 1:50:30 PM

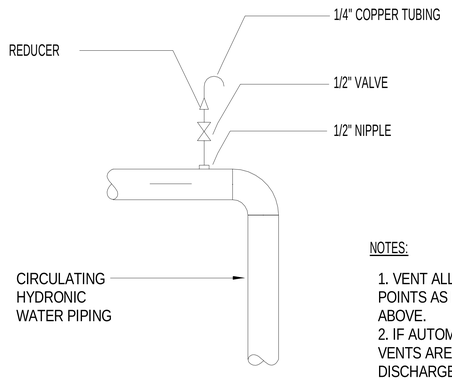

ELEVATION

NOTES:

1. VENT ALL HIGH POINTS AS INDICATED ABOVE.
2. IF AUTOMATIC AIR VENTS ARE USED, PIPE DISCHARGE TO DRAIN.

5 TYPICAL AIR VENT DETAIL

DETAIL IS NOT TO SCALE

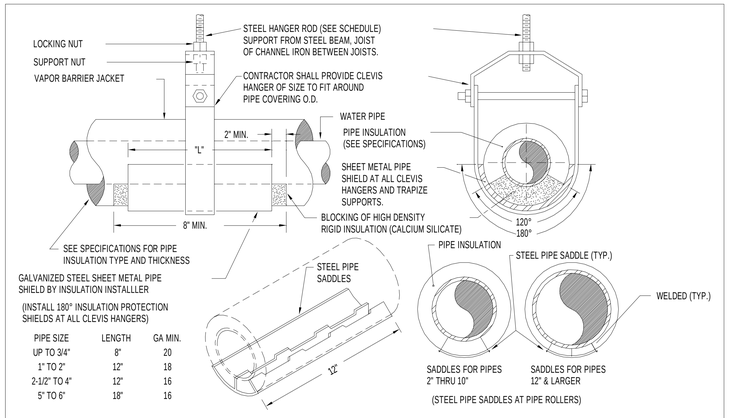

PIPE SIZE	LENGTH	GA MIN.
UP TO 3/4"	8"	20
1" TO 2"	12"	18
2-1/2" TO 4"	12"	16
5" TO 6"	18"	16

INSTALL 360° INSULATION PROTECTION SHIELDS AT ALL PIPING SECURED WITH U-BOLTS AND U-CLAMPS.
PROVIDE HIGH DENSITY INSULATION SUPPORTS AT ALL CLEVIS HANGERS, SUPPORTS AND TRAPEZE HANGERS.
PROVIDE STEEL PIPE INSULATION SADDLES ON ALL PIPES SUPPORTED BY ROLLERS.

4 PIPE COVERING PROTECTION SHIELDS & PIPE SADDLES

DETAIL IS NOT TO SCALE

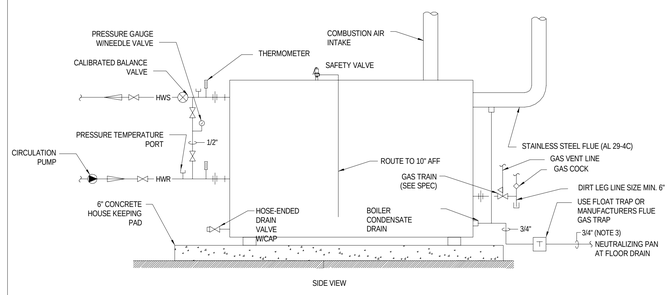

SIDE VIEW

1. PROVIDE INDIVIDUAL FLUE AND AND COMBUSTION AIR INTAKE FOR EACH BOILER
2. BOILER FLUE TO BE PITCHED 1/4" PER FOOT BACK TO THE BOILER.
3. SIZE DRAIN LINE FROM BOILER AND FLUE ATLEAST AS LARGE AS THE CONNECTION AT THE BOILER AND FLUE.
4. PROVIDE LINE SIZE VENTING FROM ALL REGULATOR DEVICES ON THE BOILER GAS TRAIN. VENTS MAY NOT BE COMBINED. TERMINATE VENT PIPING 2' MIN. ABOVE THE ROOF LINE OR AT OUTSIDE WALL WITH BIRD SCREEN & TURN DOWN ELBOW. MAINTAIN A MIN. 15' SEPARATION FROM OUTSIDE AIR INTAKES AND BLDG. OPENINGS.

3 CONDENSING BOILER PIPING CONNECTION DIAGRAM

DETAIL IS NOT TO SCALE

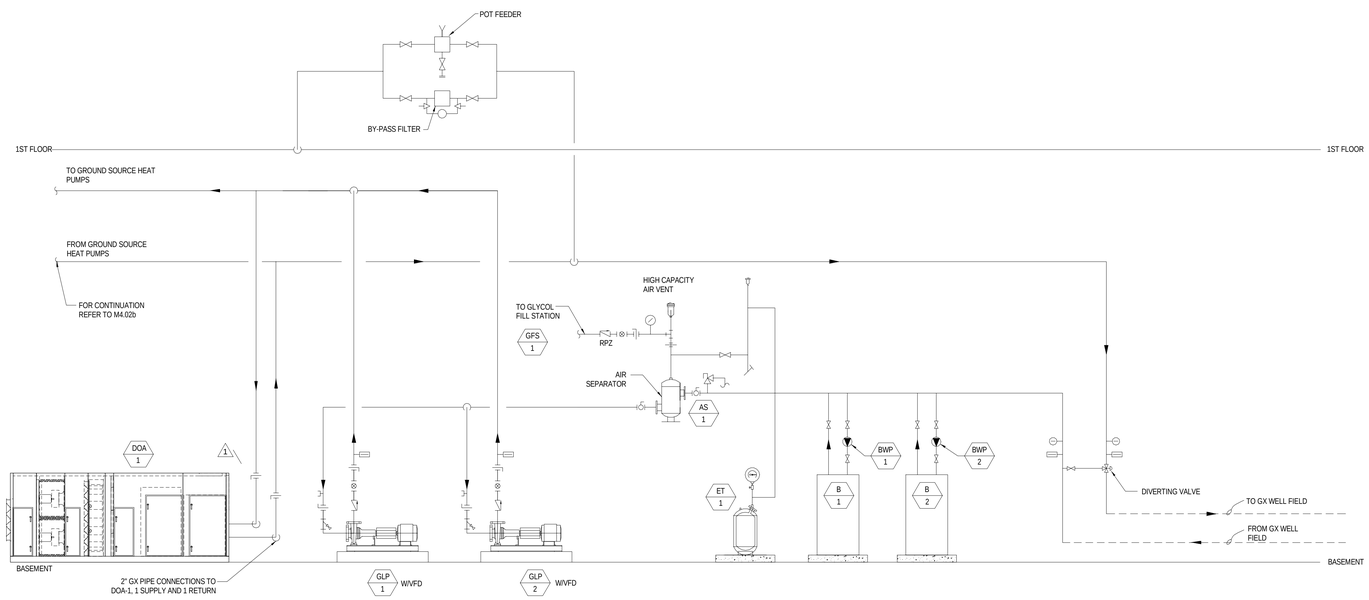

2 SYSTEM SCHEMATIC DETAIL

DETAIL IS NOT TO SCALE

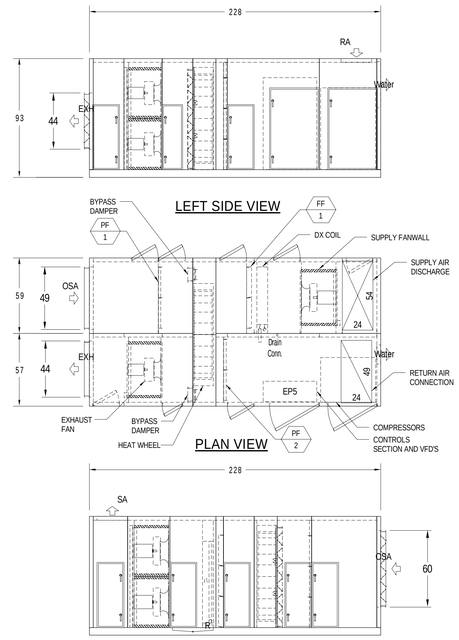

1 DOA 1 DETAIL

DETAIL IS NOT TO SCALE

boora

Boora Architects Inc.
720 SW Washington Suite 800
Portland, OR 97205
T. 503.226.1575 F. 503.241.7429
www.boora.com

dbHMS
design build engineering
303 W. Erie Street, Suite 510 Chicago, IL 60654
office: 312.915.0557
fax: 312.915.0558
website: www.dbhms.com

BENJAMIN RUBACH REGISTERED No. PE11100371 STATE OF INDIANA PROFESSIONAL ENGINEER

Earlham College Science Complex
Phase 2
801 National Road West
Richmond, IN 47374-4095

MARK	DATE	DESCRIPTION
1	01.15.2014	Addendum 2

Issued: February 28 , 2014
Scale: NTS

Copyright

CONFORMED SET

MECHANICAL DETAILS

M604

2/26/2014 1:50:34 PM

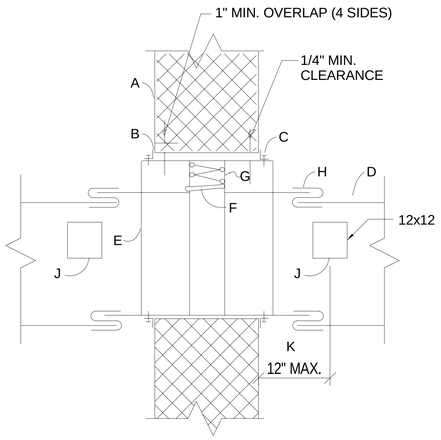

IN-DUCT MOUNTING
TYPE "B" DAMPER

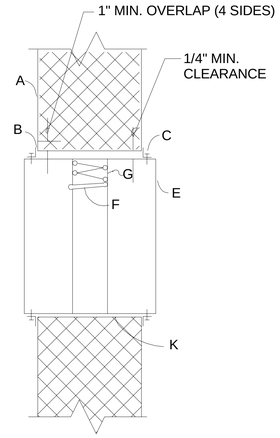

PROTECTION OF THROUGH WALL
TRANSFER MOUNTINGS
TYPE "A" DAMPER

NOTES:

1. SEE SPECS. FOR TYPE OF DAMPER REQUIRE FOR APPLICATION.

2. DAMPERS SHOWN ARE HORIZONTAL DUCTS. FOR VERTICAL DUCT OPENINGS DETAILS ARE SIMILAR EXCEPT THAT SPRING LOADED FIRE DAMPER IS USED (SEE SPECS).

SYMBOLS

A-WALL
B-2"X1"X14 GAUGE RETAINING ANGLE FOR RETROFIT & 1 1/2"X1 1/2"X16 GAUGE FOR NEW WALLS
C-1/4"X20X3/4" ROUND HEAD STOVE BOLT 12" ON CENTER DUCT

D-DUCT
E-DAMPER SLEEVE, 16 GAUGE FOR DAMPERS NOT EXCEEDING 36"W OR 24"H 14 GAUGE FOR DAMPERS LONGER THAN 36"W OR 24"H
F-UNDEWRITERS LEBEL LISTED FUSIBLE LINK

G-AUTOMATIC FIRE DAMPER, UNWRITERS LABEL LISTED, SEE SPECS.
H-BREAKAWAY CONNECTOR, "S" SLIP AROUND DUCT, MAX.4" FROM THE WALL.
J-ACCESS DOOR
K-CAULKING MIN.1/4", MAX.1/2"

3 AUTOMATIC STATIC FIRE DAMPERS

DETAIL IS NOT TO SCALE

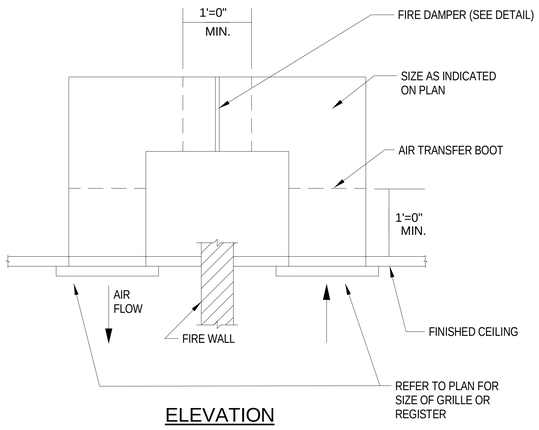

ELEVATION

2 TYPICAL AIR TRANSFER DUCT DETAIL

DETAIL IS NOT TO SCALE

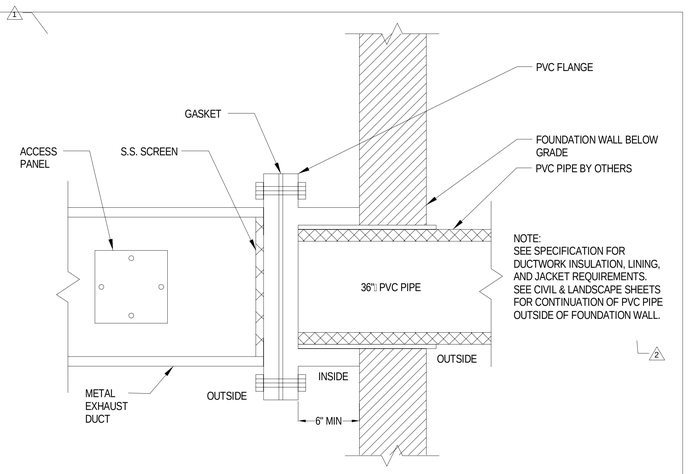

1 DUCT PENETRATION THROUGH FOUNDATION WALL BELOW GRADE

DETAIL IS NOT TO SCALE

2/26/2014 1:50:37 PM

boora

Boora Architects Inc.
720 SW Washington Suite 800
Portland, OR 97205
T. 503.226.1575 F. 503.241.7429
www.boora.com

dbHMS
design build engineering
303 W. Erie Street, Suite 510 Chicago, IL 60654
office: 312.915.0557
fax: 312.915.0558
website: www.dbhms.com

BENJAMIN RUBACH REGISTERED No. PE11100371 STATE OF INDIANA PROFESSIONAL ENGINEER

Earlham College Science Complex
Phase 2
801 National Road West
Richmond, IN 47374-4095

MARK	DATE	DESCRIPTION
2	01.24.2014	Addendum 3
1	01.15.2014	Addendum 2

Issued: February 28 , 2014
Scale: NTS

Copyright

CONFORMED SET

MECHANICAL DETAILS

M605

TYPICAL NETWORK

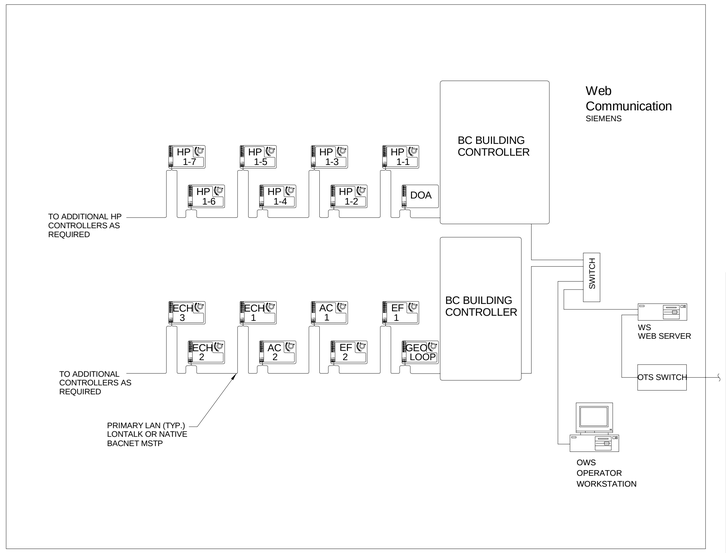

PROVIDED BY OTHERS

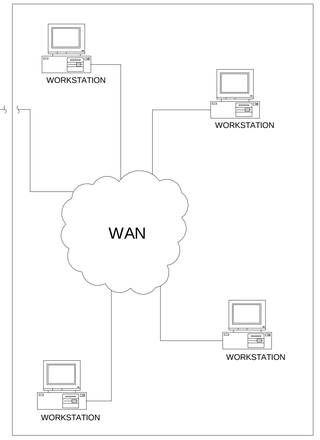

BUILDING CONTROLLER

SIEMENS

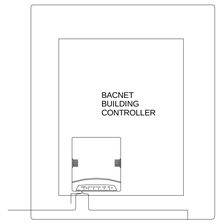

GENERAL NOTES:

1. PRIMARY UNIT CONTROLLERS, SIEMENS, WILL PROVIDE NETWORK MANAGEMENT, DATA TRANSFER AND STORAGE.

2. EACH PRIMARY UNIT CONTROLLER ALONG WITH THE CONTROLS SYSTEM SERVER AND OPERATOR WORKSTATION WILL REQUIRE A STATIC IP ADDRESS.

3. ALL NETWORK CABLE SHALL INCLUDE ONE SPARE PAIR OF WIRES.

4. CATEGORY 5E NETWORK CABLE SHALL BE UTILIZED FOR ALL PRIMARY AND SUPERVISORY WAN NETWORK WIRING.

5. SPLICING OF COMMUNICATION CABLE BETWEEN DEVICES IS NOT ALLOWED.

6. PROVIDE AND INSTALL ALL REQUIRED NETWORK WIRING, HUBS, ROUTERS, SIEMENS CONTROLLERS, SWITCHES AND INSTALLATION HARDWARE FOR COMPLETE CONTROL SYSTEM INCLUDING INTERFACE TO WAN. PROVIDE AND INSTALL POWER STRIPS AND OTHER HARDWARE NEEDED FOR INSTALLATION OF CONTROL SYSTEM COMPONENTS.

7. WEB SUPERVISOR PC, WEB SUPERVISOR SOFTWARE AND OPERATOR WORKSTATION PC SHALL BE PROVIDED AND INSTALLED BY THE SYSTEM INTEGRATOR.

8. ALL CONTROLLERS SHALL BE SIEMENS COMPATABLE FOR COMPLETE INTEROPERABILITY.

9. INSTALL SIEMENS TERMINATORS WITHIN A CONTROL PANEL WITH A CONTROLLER

10. PRIMARY UNIT CONTROLLERS, SIEMENS, WILL PROVIDE NETWORK MANAGEMENT, DATA TRANSFER AND STORAGE.

11. EXTEND EXISTING BUILDING NETWORK RS485 TO NEW PANEL.

boora

Boora Architects Inc.
720 SW Washington Suite 800
Portland, OR 97205
T. 503.226.1575 F. 503.241.7429
www.boora.com

dbHMS
design build engineering
303 W. Erie Street, Suite 510 Chicago, IL 60654
office: 312.915.0557
fax: 312.915.0558
website: www.dbhms.com

BENJAMIN RUBACH REGISTERED No. PE11100371 STATE OF INDIANA PROFESSIONAL ENGINEER

Earlham College Science Complex
Phase 2

801 National Road West
Richmond, IN 47374-4095

MARK	DATE	DESCRIPTION

Issued: February 28 , 2014
Scale: NTS

Copyright

CONFORMED SET

CONTROLS ARCHITECTURE

M700

2/21/2014 3:31:59 PM

CONTROL SYMBOLS

SYMBOL	DESCRIPTION	SYMBOL	DESCRIPTION
AI POINT NAME / POINT NAME AO	DDC POINT DESCRIPTOR WITH NAME AI - ANALOG INPUT DI - DIGITAL INPUT MI - MULTI-STATE INPUT AO - ANALOG OUTPUT DO - DIGITAL OUTPUT MO - MULTI-STATE OUTPUT AV - ANALOG VARIABLE DV - DIGITAL VARIABLE		DISCONNECT SWITCH
TS1	TEMPERATURE SENSOR WITH AVERAGING ELEMENT	480V / 120V	CONTROL TRANSFORMER
TS1	TEMPERATURE SENSOR WITH SINGLE POINT ELEMENT	MS EP1 S	RELAY COILS
TS1	TEMPERATURE SENSOR WITH PIPE WELL		FUSE
HS1	HUMIDITY SENSOR	OL	THERMAL OVERLOAD
FZ1	LOW TEMPERATURE SWITCH (FREEZESTAT)		NORMALLY OPEN AND NORMALLY CLOSED CONTACTS
FS1	HIGH TEMPERATURE SWITCH (FIRESTAT)	HAND / OFF / AUTO	HAND-OFF-AUTO SELECTOR SWITCH
SD1	SMOKE DETECTOR		WIRING DESIGNATION. (NO. OF HATCHES INDICATES NO. OF CONDUCTORS)
DPS1	DIFFERENTIAL PRESSURE SWITCH		WIRING CONNECTION
EP1	ELECTRIC-PNEUMATIC RELAY	ON - OFF	ON-OFF SELECTOR SWITCH
PE1 SP= 8#	PNEUMATIC-ELECTRIC SWITCH		PNUEMATIC ACTUATOR PLAN VIEW
IP1	CURRENT TO PNEUMATIC TRANSDUCER	T_S	ROOM TEMPERATURE SENSOR AS SHOWN ON FLOOR PLANS
V1	TWO WAY CONTROL VALVE	H_S	ROOM HUMIDITY SENSOR AS SHOWN ON FLOOR PLANS
V1 C. N.C. N.O.	THREE WAY CONTROL VALVE	DCS	NEW DIGITAL CONTROL STATION
		PCS	EXISTING PNEUMATIC CONTROL STATION
D1	DAMPER ACTUATOR	FOI	FIBER OPTIC INTERFACE
	MAIN AIR SUPPLY		PNEUMATIC RESTRICTOR
	CURRENT SENSOR	C	PILOT LIGHT (WITH LENS COLOR)
PI	PNEUMATIC TO CURRENT TRANSDUCER		REFRIGERANT DETECTOR
DPS1	WATER FLOW SWITCH		AIR FLOW MONITORING STATION
SS 1	PNEUMATIC HIGH / LOW SIGNAL SELECTOR	FAR	FIRE ALARM RELAY
AQ1	DUCT AIR QUALITY SENSOR	TDR	TIME DELAY RELAY DELAY ON MAKE OR BREAK
LS1	LIMIT SWITCH	4 / 10 — AHU OR EQUIPMENT NUMBER / ZONE NUMBER	ZONE DESCRIPTOR
V1	BUTTERFLY CONTROL VALVE WITH PNEUMATIC ACTUATOR		
FS	AIR FLOW SWITCH	HST	DUCT MOUNTED HUMIDISTAT
H.L.H.	HIGH LIMIT HUMIDISTAT	ASC	APPLICATION SPECIFIC CONTROLLER

SYMBOL AND ABBREVIATION SCHEDULE

PIPING AND PIPE FITTINGS

SYMBOL	DESCRIPTION
CD	CONDENSATE DRAIN
CWS	CHILLED WATER SUPPLY
CWR	CHILLED WATER RETURN
SCWS	SECONDARY CHILLED WATER SUPPLY
SCWR	SECONDARY CHILLED WATER RETURN
CDS	CONDENSER WATER SUPPLY
CDR	CONDENSER WATER RETURN
	NEW PIPING (LABELED ACCORDINGLY)
	FUTURE PIPING
	EXISTING PIPING
	POINT OF CONNECTION (NEW TO OLD)
	REDUCER
	FLEXIBLE CONNECTOR
	THERMOMETER W/ WELL
	PRESSURE GAUGE
	TRIPLE DUTY VALVE
	BUTTERFLY VALVE
S	SOLENOID VALVE
	GATE VALVE
	GLOBE VALVE
	BALL VALVE
	SWING CHECK VALVE
	LIFT CHECK VALVE

SENSOR LEGEND

DESIG	QTY	DESCRIPTION	MFG / REMARKS
TS-1		Immersion Temperature Sensor	
TS-2		Duct Temperature Sensor	
TS-3		OA Temperature Sensor	
TS-5		Thermostat	
TS-6		Wall Mounted Temperature Sensor	
V-1		2-Position Control Valve	
V-2		2-Position Modulating Control Valve	
V-3		3-Position Modulating Control Valve	
CS-1		Current Sensor	
CS-2		Current Sensor (VSD Type)	
CO-1		Space CO2 Sensor	
CO-2		OA CO2 Sensor	
D-1		Motorized Damper	
HS-1		Humidity Sensor	
DPT-1		Differential Pressure Transmitter	
HPS1		High Limit Pressure Switch	
DPS-1		Differential Pressure Switch	
M-1		Damper Actuator	
CT-1		2 Contact Current Transformer	
AFS-1		Airflow Monitoring Station	

TYPICAL REFERENCE FLAG NAME REPRESENTATIONS*

AMOA- Absolute minimum OA flow setpoint As determined by the Engineer of record
BOK- Pump HP-1 or HP-2 status proven on Typically Boiler OK to Run
BxALM- Boiler "x" Alarm"x" represents boiler number
BxRT- Boiler "x" Run Time"x" represents boiler number
CDN- Cool-down mode enabled
CHST- Chiller status proven on On=status proven
CHWR- Chilled water return temperature
CHWS- Chilled water supply temperature
CPCT- Chilled water valve position 0-100% open
DALM- Drive Alarm On=Alarm
DASP- Discharge air temperature setpoint
DMOA- Design minimum OA flow setpoint As determined by the Engineer of record
DPCTOA- Damper position 0-100% open
EPCT- Economizer position 0-100%
FLOW- Pump status proven on
GO- Unit "GO" Both the supply and return fans have been enabled by the BAS and the status of both has been proven ON
HOK- Heating Pump(s) status proven on
HPCT- HW reheat valve position 0-100% open
HST- Highest space temperature Pertains to zones served by the AHU only
HWR- Hot water return temperature
HWS- Hot water supply temperature
LZT- Low zone temperature flag On=zone temperature more than 2 deg F below setpoint
MAGO- Mixed air "GO" On when OA & RA conditions meet specified requirements to enable the economizer
MASP- Mixed air temperature setpoint
MAT- Mixed air temperature
MINOA- Minimum OA damper position 0-100% open
NDOA- Need for OA based on High Zone CO2 0-100%
NOFTR- FTR not allowed On=FTR not allowed based on OA conditions
OAFL- Outside air flow
Occ- Occupancy Mode Enabled
OCFM- Outside air flow
P1- Enable Pump-1 On=Run, typical for other pump numbers
P1A- Pump-1 Drive Alarm On=Aalrm, typical for other pump numbers
P1FL- Pump-1 proof failed On=proof failure, typical for other pump numbers
P1PF- Pump-1 proof On=Status proven, typical for other pump numbers
P1RT- Pump-1 Run Time Typical for other pump numbers
PHT- Preheat Coil Discharge Temperature
PRS- Hi/Lo pressure switch in alarm On=Alarm
PURG- Night Purge mode enabled
PWR- Power ON Enabled continuously whenever controller is powered and enabled
RAH- Return air humidity
RAT- Return air temperature
RFAIL- Return fan proof failed
RFPR- Return Fan proof On=Status proven
RGO- Return Fan "GO" Fan enabled by BAS and Status has been proven ON
RUN- Unit enabled (FAN running)
SAT- Supply air temperature
SBC- Setback cooling mode enabled
SBH- Setback heating mode enabled
SCFM- Supply air flow
SFAIL- Supply fan proof failed On=proof failure
SFPR- Supply Fan proof On=Status proven
SGO- Supply Fan "GO" Fan enabled by BAS and Status has been proven ON
SMK- Smoke detector alarm On=Alarm
SP1- Secondary Pump-1 Enable On=Run, typical for other pump numbers
SP1A- Secondary Pump-1 Drive Alarm On=Aalrm, typical for other pump numbers
SP1FL- Secondary Pump-1 proof failed On=proof failure, typical for other pump numbers
SP1PF- Secondary Pump-1 proof On=Status proven, typical for other pump numbers
SP1RT- Secondary Pump-1 Run Time Typical for other pump numbers
SPD- Supply fan speed 0-100%
SPD- Remote DP PID loop output 0-100%
SPID- Remote DP PID loop output 0-100%
SysGO- System Enable On whenever run conditions are met
Temp- Space Temperature
WUP- Warm-up mode enabled

*Note: This is a list of typical representations. This list is not not intented to be inclusive or definitive. Refer to actual logic diagram to ensure actual reference tag representation.

boora

Boora Architects Inc.
720 SW Washington Suite 800
Portland, OR 97205
T. 503.226.1575 F. 503.241.7429
www.boora.com

dbHMS design build engineering
303 W. Erie Street, Suite 510 Chicago, IL 60654
office: 312.915.0557
fax: 312.915.0558
website: www.dbhms.com

BENJAMIN RUBACH REGISTERED No. PE11100371 STATE OF INDIANA PROFESSIONAL ENGINEER

Earlham College Science Complex
Phase 2
801 National Road West
Richmond, IN 47374-4095

MARK	DATE	DESCRIPTION

Issued: February 28 , 2014
Scale: NTS

Copyright

CONFORMED SET

CONTROLS LEGEND

M701

2/21/2014 3:32:01 PM

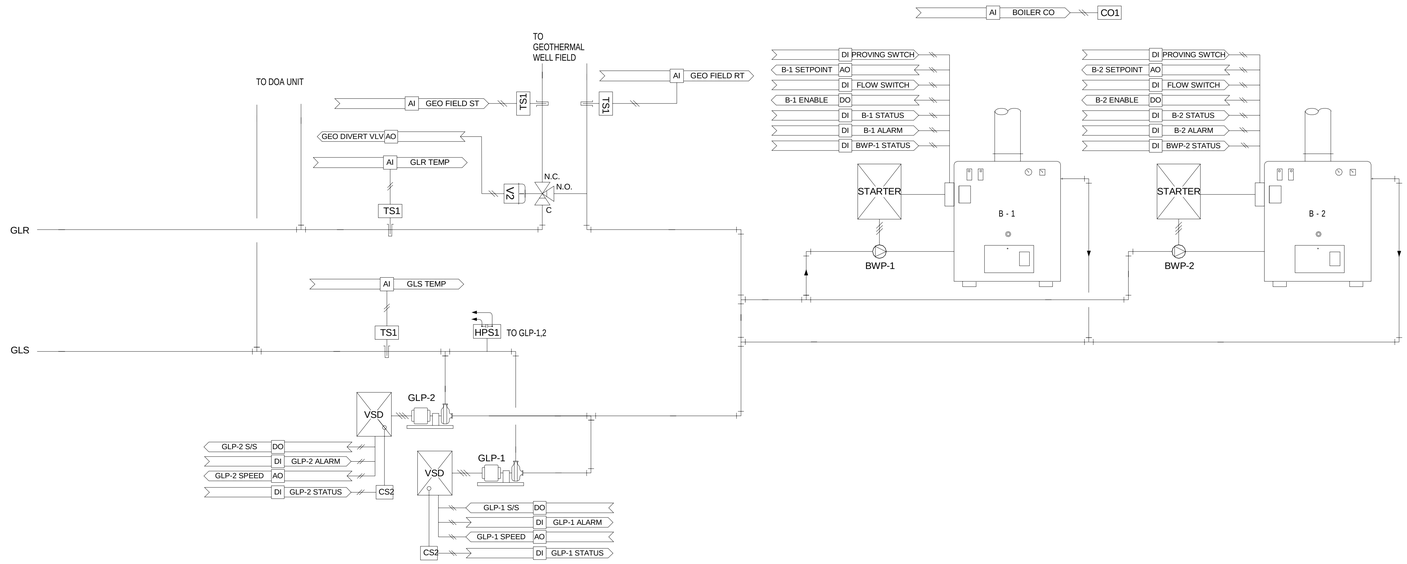

GROUND LOOP CONTROLS DIAGRAM

A. GEOTHERMAL EXCHANGE SYSTEM: THIS SYSTEM USES A GEOTHERMAL FIELD AND CONDENSING BOILERS TO PROVIDE WATER TO ALL HEAT PUMP SYSTEMS. VARIABLE PRIMARY HW PUMPS ARE USED TO MAINTAIN A DIFFERENTIAL TEMPERATURE SET POINT IN THE LOOP. THE GEOTHERMAL SYSTEM IS CONTROLLED BY THE BAS.
B. GENERAL: BAS SHALL CONTROL THE GEOTHERMAL EXCHANGE SYSTEMS AND EQUIPMENT AND PROVIDE MONITORING AND DIAGNOSTIC INFORMATION FOR MANAGEMENT PURPOSES.
C. WHEN ENABLED THE GEOTHERMAL SYSTEM WILL MODULATE THE GROUND LOOP 3-WAY VALVE, PUMPS AND BOILERS TO MAINTAIN A HP SUPPLY WATER TEMPERATURE DIFFERENTIAL OF 12F (ADJ.) WITH RESPECT TO THE RETURN WATER TEMPERATURE.
D. GEOTHERMAL PUMP CONTROL
1. ONE GLP PUMP SHALL RUN CONTINUOUSLY WHENEVER SYSTEM IS ENABLED.
2. BAS SHALL PROVE OPERATION OF THE PUMP. UPON FAILURE OF THE PUMP, THE STANDBY SHALL BE STARTED.
3. BAS SHALL MONITOR PUMP STATUS AND ACCUMULATE RUNTIME OF THE PUMPS. THE BAS SHALL ROTATE LEAD PUMP DESIGNATION ON A SCHEDULE OF DAILY OR WEEKLY. THE ENGINEER WILL SELECT THE TIME OF DAY THAT THE PUMPS ROTATE LEAD. THE BAS WILL ALSO TRACK PUMP RUN TIME (INDICATE EACH PUMPS RUN TIME ON GRAPHIC) AND ALLOW THE ENGINEER TO SELECT THE LEAD PUMP TO HELP EQUALIZE RUN TIME.
E. BOILER STAGING
1. THE BOILER STAGING IS TO BE CONTROLLED BY THE BAS. THE BUILDING AUTOMATION SYSTEM SHALL ENABLE/DISABLE THE BOILERS, PICK UP ALL ALARMS AND MONITOR POINTS INCLUDING BUT NOT LIMITED TO THOSE DESCRIBED IN THE POINTS LIST AND SHOWN ON THE HW SYSTEM CONTROL SCHEMATIC.
2. WHEN HEATING HAS BEEN ENABLED AND FLOW HAS BEEN PROVEN BY THE BAS AND THE BOILERS ARE IN REMOTE OPERATION, THE BAS SHALL THEN PROVIDE CONTROL OF THE STAGING OF THE BOILERS.
3. THE BAS WILL ALLOW THE BOILERS TO OPERATE. WHEN THE BAS SENSES A DROP IN THE RETURN WATER TEMPERATURE BELOW 34F (ADJ.), IT WILL SIGNAL THE LEAD BOILER TO OPERATE AT LOW FIRE. THE BOILER WILL GO THROUGH ITS NORMAL START-UP AND OPERATION CYCLE. IF RUN STATUS FAILS, THE LEAD BOILER WILL SHUT DOWN, THE LAG BOILER WILL BE ENABLED AND AN ALARM WILL BE SENT TO THE BAS WHICH WILL GENERATE AN ALARM AT THE OPERATOR WORKSTATION. AFTER THE FIRST BOILER IS STARTED AND HAS BEEN COMMANDED TO RUN AND MODULATE, THE BOILER CONTROLLER WILL TAKE THE BOILER TO LOW FIRE AND ATTEMPT TO MAINTAIN LOAD UP TO A 20% FIRING RATE (ADJ. BUT NO LESS THAN DOUBLE THE MANUFACTURERS MIN FIRING RATE).
4. IF THE LOAD IS NOT SATISFIED, ADDITIONAL BOILERS SHALL BE STAGED ON AT LOW FIRE UNTIL THE RETURN WATER TEMPERATURE SET POINT IS MAINTAINED. AFTER ALL BOILERS ARE ACTIVATED, BOILERS SHALL BE MODULATED AT ANY FIRING RATE TO MAINTAIN GEOTHERMAL RETURN WATER TEMPERATURE SET POINT. BOILERS SHALL BE MODULATED ACCORDING TO THE MANUFACTURER'S RECOMMENDATIONS TO MAINTAIN MAXIMUM EFFICIENCY.
5. BOILER WATER TEMPERATURES AND RUN STATUS WILL BE CONTINUOUSLY MONITORED AND ALARMED IF A FAILURE OR ALARM CONDITION OCCURS.
6. BAS SHALL ACCUMULATE RUNTIME OF THE BOILERS. THE BAS SHALL ROTATE LEAD BOILER DESIGNATION ON A SCHEDULE OF DAILY OR WEEKLY. THE ENGINEER WILL SELECT THE TIME OF DAY THAT THE BOILERS ROTATE LEAD. THE BAS WILL ALSO TRACK BOILER RUN TIME (INDICATE EACH BOILERS RUN TIME ON GRAPHIC) AND ALLOW THE ENGINEER TO SELECT THE LEAD BOILER TO HELP EQUALIZE RUN TIME.
7. TO PROVIDE BACKUP IN THE CASE OF SIGNAL FAIL OR POWER FAILURE OF THE CONTROLLER ASSOCIATED WITH THE BOILERS, PROVIDE A RELAY THAT IS CONSTANTLY POWERED BY THE CONTROLLER. WHEN THE CONTROLLER FAILS OR LOSES PROGRAM, THE RELAY SHOULD BE DE-ENERGIZED AND THE BOILER FAIL TO ENABLED UNDER THE REMOTE CONDITION AND THE BURNER CONTROL OR STAGING SHALL REVERT TO THE PACKAGE CONTROLS OF THE BOILER. THE CONTROLS CONTRACTOR SHALL PROVIDE ANY AND ALL DEVICES NECESSARY TO ACCOMPLISH THIS, AND COORDINATE THE INSTALLATION AND OPERATION OF THOSE DEVICES WITH THE BOILER MANUFACTURER.
F. REMOTE/LOCAL SWITCH
1. IN THE "LOCAL" POSITION, THE BOILER/BURNER UNIT WILL OPERATE VIA LOCAL BOILER FIRING RATE CONTROL.
2. IN THE "REMOTE" POSITION, THE BAS CONTRACTOR WILL PROVIDE PROVISIONS TO ENABLE/DISABLE THE BOILER BURNER UNIT AND CONTROL FIRING RATE.
3. THE FOLLOWING SHALL BE PROVIDED BY THE BOILER MANUFACTURER:
a. EACH BURNER PANEL WILL INCLUDE AS STANDARD, A CONTROL TOGGLE SWITCH ALLOWING THE OPERATING ENGINEER TO CHOOSE BOILER/BURNER FIRING RATE MODE VIA THE LOCAL BOILER CONTROL OR THE BAS.
b. SWITCH SHALL BE LABELED "REMOTE/LOCAL SWITCH" WITH AN ETCHED NAMEPLATE AFFIXED TO THE BURNER PANEL.
c. ALL BOILER/BURNER SAFETY LIMIT CONTROLS AND ALARMS WILL REMAIN ACTIVE AND INDEPENDENT OF THE REMOTE/LOCAL SELECTOR SWITCH POSITION CHOSEN BY THE OPERATING ENGINEER.
d. AS BUILT WIRING DIAGRAMS FROM THE BURNER MANUFACTURER WILL CLEARLY SHOW THE "REMOTE/LOCAL SWITCH" AND ENABLE/DISABLE POINT TERMINALS.
G. GEOTHERMAL WATER TEMPERATURE CONTROL OPERATING MODES:
1. GROUND LOOP RETURN TEMPERATURE 41F OR LESS.
a. THE GEOTHERMAL WELL THREE WAY VALVE SHALL BE OPEN.
b. THE BOILERS SHALL ACTIVATE AT A RETURN WATER TEMPERATURE OF 34F (ADJ.) OR A SUPPLY TEMPERATURE OF 40F (ADJ.) AND MODULATE TO MAINTAIN THE GROUND LOOP SUPPLY TEMPERATURE AT 46F (ADJ.). ONCE THE GROUND LOOP RETURN TEMPERATURE EXCEEDS 40F (ADJ.), THE BOILER SHALL BE DISABLED
c. THE ACTIVE GROUND LOOP PUMP SHALL MODULATE TO MAINTAIN A 12F (ADJ.) DELTA ACROSS THE GLS AND GLR TEMPERATURE SENSORS.
2. GROUND LOOP RETURN TEMPERATURE 41F TO 60F.
a. THE GEOTHERMAL WELL THREE WAY VALVE SHALL MODULATE TO MAINTAIN A 12F (ADJ.) DELTA ACROSS THE GLS AND GLR TEMPERATURE SENSORS. IF THE DELTA ACROSS THE GEOTHERMAL FIELD SUPPLY AND RETURN IS NEGATIVE FOR 10 MINUTES (ADJ.), THE THREE WAY VALVE SHALL GO TO FULL BYPASS UNTIL THE GROUND LOOP RETURN TEMPERATURE DROPS 5F (ADJ.) AFTER WHICH THE VALVE WILL RESUME MODULATING.
b. THE BOILERS SHALL BE DISABLED.
c. THE ACTIVE GROUND LOOP PUMP SHALL RUN AT MINIMUM SPEED.
3. GROUND LOOP RETURN TEMPERATURE 60F TO 80F.
a. THE GEOTHERMAL WELL THREE WAY VALVE SHALL BE CLOSED.
b. THE BOILERS SHALL BE DISABLED.
c. THE ACTIVE GROUND LOOP PUMP SHALL RUN AT MINIMUM SPEED.
4. GROUND LOOP RETURN TEMPERATURE 80F TO 95F.
a. THE GEOTHERMAL WELL THREE WAY VALVE SHALL MODULATE TO MAINTAIN A 12F DELTA ACROSS THE GLS AND GLR TEMPERATURE SENSORS. IF THE DELTA ACROSS THE GEOTHERMAL FIELD SUPPLY AND RETURN IS POSITIVE FOR 10 MINUTES (ADJ.), THE THREE WAY VALVE SHALL GO TO FULL BYPASS UNTIL THE GROUND LOOP RETURN TEMPERATURE RISES 5F (ADJ.) AFTER WHICH THE VALVE WILL RESUME MODULATING.
b. THE BOILERS SHALL BE DISABLED.
c. THE ACTIVE GROUND LOOP PUMP SHALL RUN AT MINIMUM SPEED.
5. GROUND LOOP RETURN TEMPERATURE 95F OR GREATER.
a. THE GEOTHERMAL WELL THREE WAY VALVE SHALL BE OPEN.
b. THE BOILERS SHALL BE OFF.
c. THE ACTIVE GROUND LOOP PUMP SHALL MODULATE TO MAINTAIN A 12F (ADJ.) DELTA ACROSS THE GLS AND GLR TEMPERATURE SENSORS.
H. EMERGENCY FUEL BURNER SWITCH
1. PROVIDE AN EMERGENCY FUEL BURNER SWITCH ADJACENT TO THE PRIMARY ENTRANCE DOOR AND IF REQUIRED BY THE DRAWINGS AT A SECOND ENTRANCE.
2. THE SWITCH WILL BE LOCATED BETWEEN 6 FT AND 7 FT ABOVE THE FLOOR.
3. THE SWITCH WILL BE LABLED "EMERGENCY FUEL BURNER SWITCH" AND THE SWITCH BUTTON WILL BE HARD WIRED TO EACH BOILERS SAFETY CIRCUIT (THE CIRCUIT THAT REQUIRES MANUAL RESET).
4. THE SWITCH WILL BE AN EATON HT800, OR EQUAL, WITH TWO SETS OF CONTACTS AND A RED 30MM BUTTON, ONE CONTACT IS FOR THE BOILERS AND THE OTHER FOR THE BAS. IF THERE IS MORE THAN ONE DOOR TO THE BOILER ROOM, THERE SHALL BE A SWITCH LOCATED AT EACH DOOR. FOR MULTIPLE SWITCHES EITHER SWITCH WILL TRIP THE BOILERS AND SIGNAL THE BAS. WHEN THE SWITCH IS PUSHED IN IT TRIPS THE BOILERS.
I. MISCELLANEOUS MONITORING
1. THE BAS SHALL MONITOR AND DISPLAY THE CO LEVEL IN THE BOILER ROOM AND ENUNCIATE THE FOLLOWING ALARMS AT THE BAS HEAD END COMPUTER:
a. "CO LEAKAGE FROM BOILER" ALARM AT 50PPM (ADJ.)
b. "CO LEVELS DANGEROUSLY HIGH" AT 75PPM (ADJ.)
2. THE BAS CONTRACTOR SHALL HARDWIRE AN ALARM HORN AND THE MONITOR WILL HAVE A LOCAL PROGRESSIVE OR DIGITAL DISPLAY OF CO LEVEL AND A HIGH LEVEL ALARM. THE ALARM HORN SHALL BE WIRED DIRECTLY TO A RELAY OUTPUT ON THE CO MONITOR. THE LOCAL DISPLAY AND ALARM HORN OUTPUT SHALL NOT DEPEND UPON THE BAS TO BE ACTIVATED.
J. ALARMS:
1. GLYCOL FILL STATION LOW LEVEL ALARM.
2. SEND AN ALARM TO THE OWS IF THE HEATING OR COOLING MODE SUPPLY WATER DIFFERENTIAL IS GREATER THAN 12F FOR 10 MINUTES (ADJ.).
3. SEND AN ALARM TO THE OWS IF THE GROUND LOOP RETURN WATER TEMPERATURE IS GREATER THAN 102F FOR 10 MINUTES (ADJ.).
4. SEND AN ALARM TO THE OWS IF THE GROUND LOOP RETURN WATER TEMPERATURE IS LESS THAN 34F FOR 10 MINUTES (ADJ.).

CONTROL SEQUENCE

POINTS LIST

ADDRESS	POINT DESCRIPTOR	DI	AI	DO	AO	VP	ALARM	REMARKS	TREND
	B-1 PROVING SWITCH	•							X
	B-1 SETPOINT				•				X
	B-1 FLOW SWITCH	•							X
	B-1 ENABLE			•					X
	B-1 STATUS		•						X
	B-1 ALARM	•					X		
	BP-1 S/S			•					X
	BP-1 STATUS	•							X
	B-2 PROVING SWITCH	•							X
	B-2 SETPOINT				•				X
	B-2 FLOW SWITCH	•							X
	B-2 ENABLE			•					X
	B-2 STATUS		•						X
	B-2 ALARM	•					X		
	BP-2 S/S			•					X
	BP-2 STATUS	•							X
	GL DIFF PRESSURE		•						X
	GL RETURN TEMP		•						X
	GEO SUPPLY TEMP		•						X
	GL SUPPLY TEMP		•						X
	GLP-1 S/S			•					X
	GLP-1 STATUS		•						X
	GLP-1 SPEED				•				X
	GLP-1 ALARM	•					X		
	GLP-2 S/S			•					X
	GLP-2 STATUS		•						X
	GLP-2 SPEED				•				X
	GLP-2 ALARM	•					X		
	GEO DIVERT VALVE				•				X
	BOILER CO		•				X		X

DRAWING NOTES:

1. CONTROL DRAWINGS DO NOT INCLUDE ALL HYDRONIC PIPING DEVICES. REFER TO SYSTEM SCHEMATICS FOR COMPLETE PIPING LAYOUT.

boora

Boora Architects Inc.
720 SW Washington Suite 800
Portland, OR 97205
T. 503.226.1575 F. 503.241.7429
www.boora.com

dbHMS
design build engineering
303 W. Erie Street, Suite 510 Chicago, IL 60654
office: 312.915.0557
fax: 312.915.0558
website: www.dbhms.com

BENJAMIN RUBACH REGISTERED No. PE11500371 STATE OF INDIANA PROFESSIONAL ENGINEER

Earlham College Science Complex
Phase 2
801 National Road West
Richmond, IN 47374-4095

MARK	DATE	DESCRIPTION

Issued: February 28 , 2014
Scale: NTS

Copyright

CONFORMED SET

CONDENSER WATER CONTROLS DIAGRAM

M702

2/21/2014 3:32:03 PM

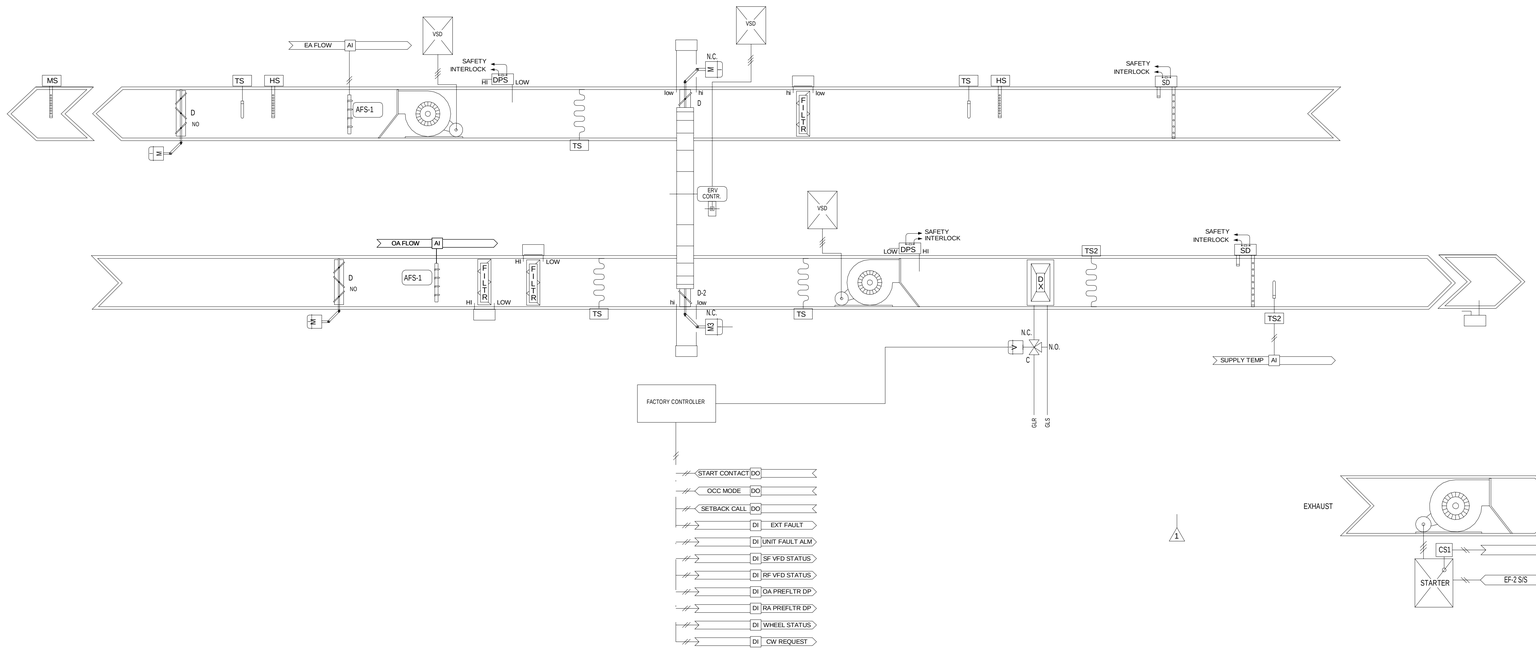

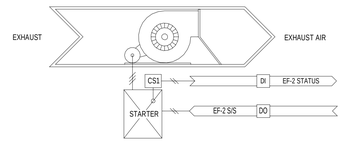

DOA-1 CONTROLS DIAGRAM

A. DOA UNIT: THE DOA UNIT USES A GEOTHERMAL LOOP TO PROVIDE CONDENSER WATER TO THE HEAT PUMP COMPRESSORS. AN ERV IS USED TO RECOVER ENERGY FROM THE EXHAUST AIR AND PREHEAT INCOMING OUTSIDE AIR. THE SUPPLY AND RETURN FAN MODULATES TO MAINTAIN DUCT STATIC PRESSURE TO THE HP UNITS.

B. UNIT START UP
   1. WHEN THE UNIT IS IN AN UNOCCUPIED STATE, THE SUPPLY FAN IS OFF, EXHAUST FAN IS OFF, THE OUTSIDE AND EXHAUST AIR DAMPER ARE CLOSED AND THE RETURN AIR DAMPER IS OPEN.
   2. WHEN THE UNIT IS SWITCHED INTO AN OCCUPIED STATE, THE SUPPLY FAN IS STARTED, THE OUTSIDE AND EXHAUST AIR DAMPER ARE OPEN AND AN END-SWITCH STARTS THE EXHAUST FAN.

C. SUPPLY/ RETURN FAN ENABLE: BAS SHALL CONTROL THE SUPPLY FAN AS FOLLOWS:
   1. START/STOP: BAS SHALL COMMAND THE OPERATION OF THE FAN AND IT SHALL RUN CONTINUOUSLY WHENEVER THE DOA UNIT IS "ENERGIZED" AS SPECIFIED BY A SCHEDULE.
   2. PROOF: BAS SHALL PROVE FAN OPERATION AND USE THE STATUS INDICATION TO ACCUMULATE RUNTIME. UPON FAILURE OF THE FAN, THE BAS SHALL ENUNCIATE AN ALARM AS SPECIFIED ABOVE.

D. VAV SUPPLY FAN CAPACITY CONTROL: BAS SHALL CONTROL THE OUTPUT OF THE SUPPLY FAN AS FOLLOWS:
   1. VSD CONTROL: WHENEVER THE FAN IS ENERGIZED, BAS SHALL CONTROL THE SPEED OF THE VSD TO MAINTAIN THE SUPPLY DUCT STATIC PRESSURE SETPOINT. ON START AND STOP, THE VSD SHALL RAMP TO SPEED AND SLOW DOWN WITHIN ADJUSTABLE ACCELERATION AND DECELERATION LIMITS. BAS SHALL MONITOR A COMMON ALARM OUTPUT FROM THE DRIVE AND ENUNCIATE A LEVEL 2 ALARM WHEN AN ALARM IS INDICATED.
   2. SUPPLY DUCT STATIC PRESSURE SETPOINT: SETPOINT SHALL BE DETERMINED USING THE FOLLOWING STRATEGY:
      a. RESET: FROM THE TEST AND BALANCERS DETERMINED MAXIMUM AND MINIMUM STATIC PRESSURE TO MAINTAIN THE NUMBER OF REQUESTS FOR STATIC PRESSURE SENT FROM THE HP'S AT 4 (ADJ.). A REQUEST FOR STATIC PRESSURE SHALL BE SENT FROM A HP BOX TO THE PARENT DOA WHENEVER THE PRIMARY AIR DAMPER IS OPEN GREATER THAN 90%.

E. EXHAUST FAN CONTROL (EF-2)
   1. EF-2 IS TO RUN CONTINUOUSLY DURING OCCUPIED HOURS.
   2. BAS TO HAVE TIME OF DAY SCHEDULE TO DETERMINE RUN TIMES.

F. VSD CONTROL: WHENEVER THE FAN IS ENERGIZED, BAS SHALL CONTROL THE SPEED OF THE VSD TO MAINTAIN THE EXHAUST AIR FLOW AT SETPOINT. ON START AND STOP, THE VSD SHALL RAMP TO SPEED AND SLOW DOWN WITHIN ADJUSTABLE ACCELERATION AND DECELERATION LIMITS. BAS SHALL MONITOR A COMMON ALARM OUTPUT FROM THE DRIVE AND ENUNCIATE A LEVEL 2 ALARM WHEN AN ALARM IS INDICATED.
   1. EXHAUST AIR FLOW SETPOINT: SETPOINT SHALL BE DETERMINED USING THE FOLLOWING STRATEGY:
      a. FLOW TRACKING: THE EXHAUST FAN SHALL RUN TO MAINTAIN AN EXHAUST FLOW SETPOINT OF THE SUPPLY FLOW MINUS AN OFFSET VALUE (ADJ.). (THIS OFFSET VALUE SHALL BE DETERMINED BY THE BAS BY MONITORING EXHAUST FLOW FROM EF-1 AND NEGATING THAT AIRFLOW FROM THE OA CFM. DURING AND UNOCCUPIED PERIOD, THE OFFSET VALUE SHALL BE 0 CFM.)

G. DISCHARGE TEMPERATURE CONTROL: THE DISCHARGE TEMPERATURE SETPOINT SHALL BE DETERMINED AS FOLLOWS
   1. DURING THE OCCUPIED PERIOD, THE DISCHARGE TEMPERATURE SHALL BE 55°F

H. OA DAMPER: BAS SHALL CONTROL THE DAMPER AS FOLLOWS:
   1. CLOSED: WHEN DOA UNIT IS DEENERGIZED, THE DAMPER SHALL REMAIN IN ITS "OFF" POSITION. WHEN THE UNIT IS ENERGIZED DURING THE UNOCCUPIED PERIOD, THE MINIMUM OA DAMPER POSITION/ FLOW RATE SHALL BE 0% / 0CFM.
   2. OPEN: WHEN DOA UNIT IS ENERGIZED, THE OA DAMPER SHALL OPEN TO ITS MAXIMUM POSITION 100%.

I. HEAT PUMP HEATING AND COOLING: WHENEVER AHU IS ENERGIZED, THE GROUND SOURCE HEAT PUMP SHALL MODULATE TO MAINTAIN DISCHARGE AIR TEMPERATURE BASED ON THE FOLLOWING SEQUENCE:
   1. THE HEAT PUMP MUST MODULATE TO MAINTAIN A DISCHARGE AIR TEMPERATURE OF 55F (ADJ.).
   2. IF THE DISCHARGE AIR DROPS BELOW SETPOINT BY 2F (ADJ.), THE HEAT PUMP WILL ENABLE HEATING MODE.
   3. IF THE DISCHARGE AIR RISES ABOVE SETPOINT BY 2F (ADJ.), THE HEAT PUMP WILL ENABLE COOLING MODE.
   4. A PID LOOP SHALL MAINTAIN THE DISCHARGE AIR TEMPERATURE AT SETPOINT.

J. ENERGY RECOVERY VENTILATOR
   1. THE ENERGY RECOVERY WHEEL WILL RUN WHENEVER THE DOA UNIT IS ENERGIZED AND THE ECONOMIZER MODE IS DISABLED.
   2. THE ENERGY RECOVERY WHEEL WILL MODULATE CAPACITY TO PREVENT FROSTING.
   3. IF OA TEMPERATURE IS LESS THAN 40°F AND RELATIVE HUMIDITY IS GREATER THAN 90%, STOP WHEEL ROTATION TO PREVENT FROST FORMATION AND JOG THE WHEEL EVERY 2 MINUTES (ADJ.).
   4. UNIT IS EQUIPPED WITH WHEEL BYPASS DAMPERS, WHICH MODULATE IN ORDER TO ENSURE THAT PRESSURE DROP ACROSS THE WHEEL SECTION DOES NOT EXCEED SET-POINT. SHOULD THE PRESSURE DROP ACROSS THE WHEEL SECTION EXCEED SET-POINT PLUS DEAD-BAND, THE CONTROL ALGORITHM WILL MODULATE THE WHEEL BYPASS DAMPERS OPEN, IN ORDER TO BRING DIFFERENTIAL PRESSURE BACK WITHIN DEAD-BAND.

K. DEHUMIDIFICATION CONTROL
   1. IF THE SPACE/ROOM OR RETURN AIR HUMIDITY IS ABOVE SET-POINT OUTSIDE THE DEAD-BAND, THE UNIT'S ECONOMIZER AND COMPRESSORS WILL BE CONTROLLED TO MAINTAIN THE COOLING COIL LEAVING AIR TEMPERATURE AT THE COOLING COIL LEAVING AIR TEMPERATURE SET-POINT. THIS SET-POINT WILL BE SLOWLY LOWERED UNTIL THE HUMIDITY READING IS WITHIN THE DEADBAND OR REACHES THE SUPPLY AIR TEMPERATURE SET-POINT WITHOUT RESET (SPECIFIED SET-POINT). ONCE WITHIN THE DEADBAND THE COOLING COIL LEAVING AIR TEMPERATURE SET-POINT WILL REMAIN CONSTANT.
   2. IF THE HUMIDITY LEVEL DROPS BELOW THE DEAD-BAND, THE COOLING COIL LEAVING AIR TEMPERATURE SET-POINT IS SLOWLY RESET UPWARD UNTIL THE HUMIDITY IS WITHIN THE DEAD-BAND OR THE TEMPERATURE SET-POINT MATCHES THE SUPPLY AIR TEMPERATURE SET-POINT INCLUDING RESET (CONTROL SET-POINT). DURING DEHUMIDIFICATION, THE COMPRESSORS ARE STAGED TO MAINTAIN THE DESIRED SUPPLY AIR TEMPERATURE CONTROL SET-POINT. WHEN THE TWO TEMPERATURE SET-POINTS ARE THE SAME AND THE HUMIDITY LEVEL IS BELOW THE DEAD-BAND, THE SYSTEM WILL RETURN TO NORMAL OPERATION.

L. CONDENSER WATER VALVE CONTROL: THE CONDENSER WATER THREE-WAY VALVE SHALL BE MODULATED TO MAINTAIN REFRIGERANT PRESSURE AT SETPOINT (ADJ.).

M. SAFETIES: BAS SHALL EXECUTE THE FOLLOWING SAFETY LOGIC STRATEGIES AS DETAILED IN ITEM 3.2 AIR HANDLING UNITS GENERAL: SAFETIES. SAFETY LOGIC STRATEGIES SHALL INCLUDE:
   1. FREEZE SAFETY
   2. SOFTWARE LOW LIMIT SAFETY
   3. SMOKE SAFETY
   4. SUPPLY AIR HIGH PRESSURE SAFETY
   5. RETURN AIR LOW PRESSURE SAFETY

N. DIAGNOSTICS: BAS SHALL EXECUTE THE FOLLOWING DIAGNOSTIC STRATEGIES AS DETAILED IN ITEM 3.2 AIR HANDLING UNITS GENERAL: DIAGNOSTICS. DIAGNOSTIC LOGIC STRATEGIES SHALL INCLUDE:
   1. RUN TIME LIMIT
   2. DP TRANSMITTER FILTER MONITORING

O. ALARMS:
   1. IF THE AVERAGE SPACE TEMPERATURE DROPS 5 DEGREES (ADJ.) BELOW SETPOINT FOR 15 MINUTES (ADJ.), SIGNAL AN ALARM.
   2. IF ANY SPACE CO2 RISES ABOVE 1200PPM (ADJ.) FOR 10 MINUTES (ADJ.) SIGNAL AN ALARM.
   3. IF MOISTURE IS SENSED IN THE EXHAUST AIR DUCT, SIGNAL AN ALARM
   4. BAS TO DISPLAY ALL ALARMS, FAULTS AND WARNINGS SENT FROM THE FACTORY CONTROLLER.
   5. A LOW SUPPLY AIR TEMPERATURE FUNCTION, INTERNAL TO THE CONTROLLER WILL BE PROVIDED TO STOP UNIT OPERATION; IF THE SUPPLY AIR TEMPERATURE IS BELOW SET-POINT (40°± 2°F, ADJ.) FOR LONGER THAN THE TIME SET-POINT (240 SEC, ADJ.).
   6. A HIGH SUPPLY AIR TEMPERATURE FUNCTION, INTERNAL TO THE CONTROLLER WILL BE PROVIDED TO SEND A FAULT; IF THE SUPPLY AIR TEMPERATURE IS ABOVE SET-POINT (125°± 2°F, ADJ.) FOR LONGER THAN THE TIME SET-POINT (240 SEC, ADJ.).
   7. IF EF-2 STATUS DOES NOT MATCH THE S/S SIGNAL AFTER 5 MINUTES (ADJ.), SIGNAL AN ALARM.

CONTROL SEQUENCE

POINTS LIST

ADDRESS	POINT DESCRIPTOR	POINT TYPE DI	AI	DO	AO	VP	ALARM	REMARKS	TREND
	SUPPLY TEMP		•						X
	START CONTACT	•							X
	OCC MODE	•							X
	SETBACK CALL	•							X
	EXT FAULT			•			X		
	UNIT FAULT ALARM			•			X		
	SF VFD STATUS			•					X
	RF VFD STATUS			•					X
	OA PREFILTER DP			•					X
	RA PREFILTER DP			•					X
	WHEEL STATUS			•					X
	CW REQUEST			•					X
	EF-2 S/S			•					X
	EF-2 STATUS	•							X
	OA FLOW		•						X
	EA FLOW		•						X

DRAWING NOTES:

1. CONTROL DRAWINGS DO NOT INCLUDE ALL HYDRONIC PIPING DEVICES. REFER TO SYSTEM SCHEMATICS FOR COMPLETE PIPING LAYOUT.

2. 3-WAY VALVE TO BE FACTORY PROVIDED AND CONTROLLED.

3. MOISTURE SENSOR TO BE MOUNTED AT THE BASE OF THE EXHAUST AIR DUCT.

boora

Boora Architects Inc.
720 SW Washington Suite 800
Portland, OR 97205
T. 503.226.1575 F. 503.241.7429
www.boora.com

dbHMS
design build engineering
303 W. Erie Street, Suite 510 Chicago, IL 60654
office: 312.915.0557
fax: 312.915.0558
website: www.dbhms.com

BENJAMIN RUBACH REGISTERED No. PE11100371 STATE OF INDIANA PROFESSIONAL ENGINEER

Earlham College Science Complex
Phase 2
801 National Road West
Richmond, IN 47374-4095

MARK	DATE	DESCRIPTION
1	01.15.2014	Addendum 2

Issued: February 28 , 2014
Scale: NTS

Copyright

CONFORMED SET

DOA-1 CONTROLS DIAGRAM

M703

2/21/2014 3:32:05 PM

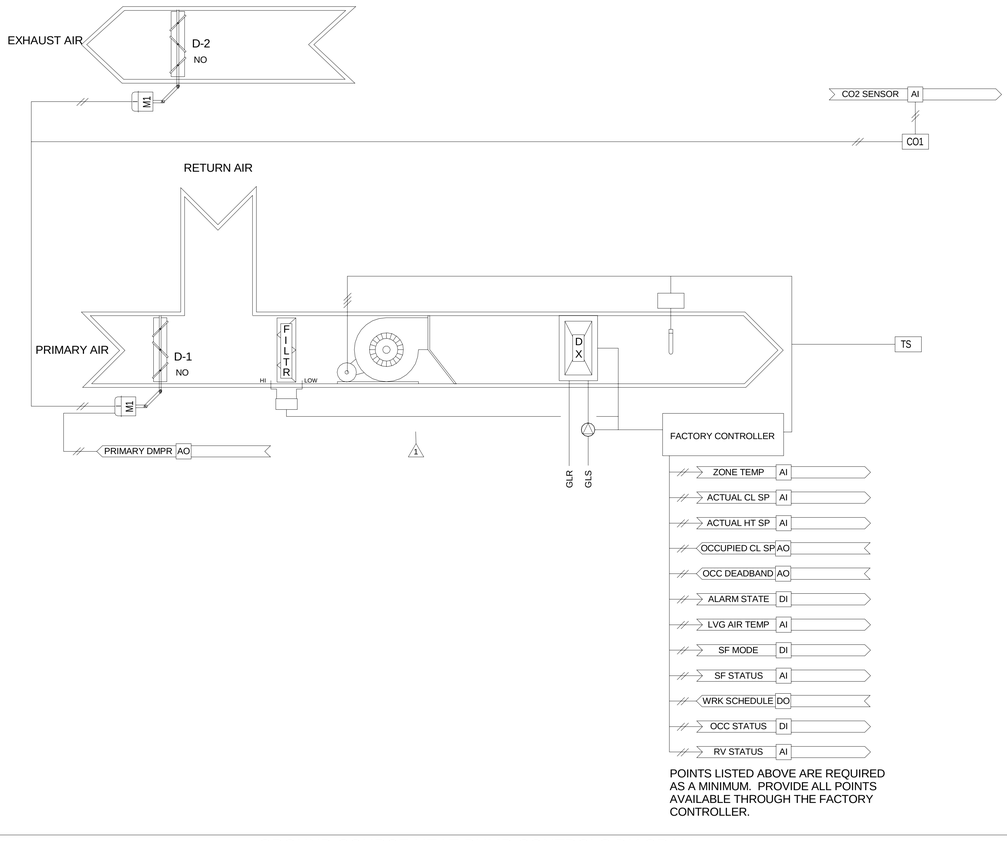

POINTS LISTED ABOVE ARE REQUIRED AS A MINIMUM. PROVIDE ALL POINTS AVAILABLE THROUGH THE FACTORY CONTROLLER.

GROUND SOURCE HEAT PUMP CONTROLS DIAGRAM

GROUND SOURCE HP

A. GENERAL: THE HP SHALL RUN TO MAINTAIN SPACE TEMPERATURE DURING SCHEDULED OCCUPANCY UTILIZING THE FACTORY CONTROLS AND SEQUENCE. SCHEDULE SHALL BE THE SAME AS THE PARENT DOA-1.
B. SPACE TEMPERATURE CONTROL: THREE SETPOINTS SHALL APPLY. NORMAL 72°F (ADJ.), SETBACK HEATING 65°F (ADJ.), AND SETBACK COOLING 85°F (ADJ.). THESE THREE VALUES SHALL BE THE ONLY VALUES CHANGED BY THE OPERATOR TO ADJUST SPACE TEMPERATURES.
C. PRIMARY AIR DAMPER: PRIMARY AIR DAMPER SHALL MODULATE TO MAINTAIN THE ZONE CO2 SETPOINT. PRIMARY AIR DAMPER POSITION SHALL GO TO MINIMUM POSITION WHEN IN OCCUPIED MODE AND REMAIN CLOSED WHEN UNOCCUPIED.
   1. IF SPACE CO2 DROPS BELOW 750PPM FOR 5 MINUTES (ADJ.), THE SPACE TEMPERATURE SETPOINTS ARE SATISFIED, THEN THE PRIMARY AIR DAMPER SHALL MODULATE TOWARDS CLOSED TO A LOWER PRIMARY AIRFLOW USING A SLOW ACTING PI LOOP.
   2. IF SPACE CO2 RISES ABOVE CODE LIMIT FOR 5 MINUTES (ADJ.), THE SPACE TEMPERATURE SETPOINTS ARE SATISFIED, THEN THE PRIMARY AIR DAMPER SHALL MODULATE TOWARDS OPEN TO A HIGHER PRIMARY AIRFLOW USING A SLOW ACTING PI LOOP. 1
   3. WHENEVER THERE IS A CALL FOR PRIMARY AIR TO CONTROL CO2 LEVELS AND THE FAN IS OFF, COMMAND THE FAN ON UNTIL CO2 SETPOINTS ARE SATISFIED.
D. TEMPERATURE CONTROL: THE HP SHALL CYCLE THE COMPRESSOR, CIRCULATION PUMP AND FAN TO MAINTAIN SPACE TEMPERATURE UTILIZING THE FACTORY SEQUENCE OF OPERATION.
E. CIRCULATING PUMP CONTROL: THE HP CIRCULATING PUMP SHALL BE CONTROLLED BY THE FACTORY PROVIDED CONTROLLER. THE PUMP SHALL ENABLE AND PROVE OPERATION WHENEVER THERE IS A CALL FOR HEATING AND COOLING. 1
F. ALARMS:
   1. IF THE SPACE TEMPERATURE DROPS 10 DEGREES (ADJ.) BELOW SETPOINT FOR 15 MINUTES (ADJ.), SIGNAL AN ALARM.
   2. IF THE SPACE CO2 RISES ABOVE 1200PPM, SIGNAL AN ALARM.

CONTROL SEQUENCE

POINTS LIST

ADDRESS	POINT DESCRIPTOR	POINT TYPE DI	AI	DO	AO	VP	ALARM	REMARKS	TREND
	CO2 SENSOR		•						X
	PRIMARY DAMPER				•				X
	ZONE TEMP		•						X
	ACTUAL CL SP		•						X
	ACTUAL HT SP		•						X
	OCCUPIED CL SP				•				X
	OCC DEADBAND				•				X
	LVG AIR TEMP		•				X		
	ALARM STATE	•							X
	RV STATUS	•							X
	SF OPERATION MODE	•							X
	SF STATUS		•						X
	WORK SCHEDULE			•					X
	OCCUPIED STATUS	•							X

DRAWING NOTES:

1. CONTROL DRAWINGS DO NOT INCLUDE ALL HYDRONIC PIPING DEVICES. REFER TO SYSTEM SCHEMATICS FOR COMPLETE PIPING LAYOUT.

2. THERMOSTAT TO BE INSTALLED BY CONTROLS CONTRACTOR AND FIELD WIRED .

1

boora

Boora Architects Inc.
720 SW Washington Suite 800
Portland, OR 97205
T. 503.226.1575 F. 503.241.7429
www.boora.com

dbHMS
design build engineering
303 W. Erie Street, Suite 510 Chicago, IL 60654
office: 312.915.0557
fax: 312.915.0558
website: www.dbhms.com

BENJAMIN RUBACH REGISTERED No. PE11100371 STATE OF INDIANA PROFESSIONAL ENGINEER

Earlham College Science Complex
Phase 2
801 National Road West
Richmond, IN 47374-4095

MARK	DATE	DESCRIPTION
1	01.15.2014	Addendum 2

Issued: February 28 , 2014
Scale: NTS

Copyright

CONFORMED SET

HEAT PUMP CONTROLS DIAGRAM

M704

2/21/2014 3:32:07 PM

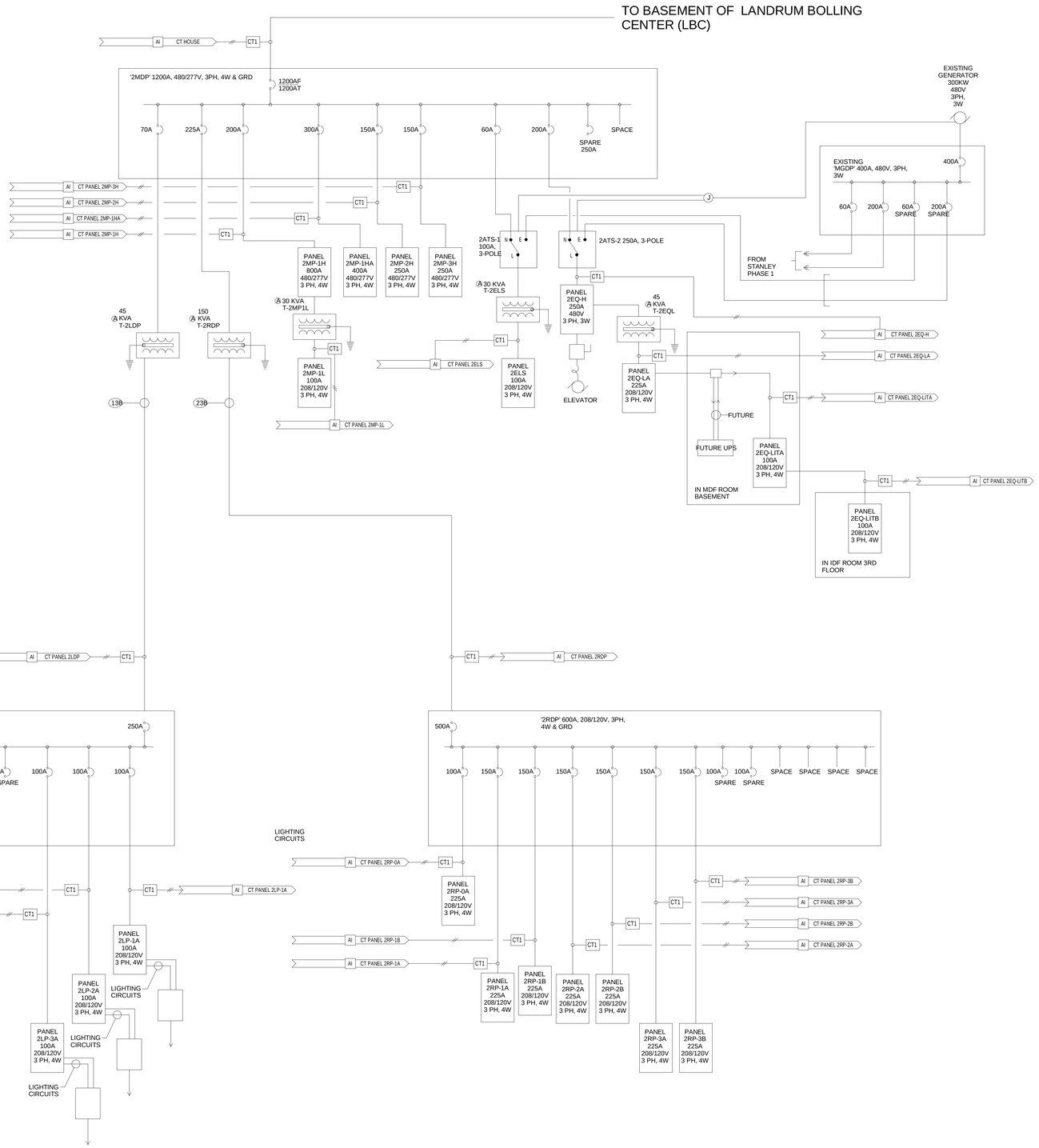

POINTS LIST

ADDRESS	POINT DESCRIPTOR	POINT TYPE DI	AI	DO	AO	VP	ALARM	REMARKS	TREND
	CT HOUSE		•						X
	CT PANEL 2MP-1H		•						X
	CT PANEL 2MP-1HA		•						X
	CT PANEL 2MP-2H		•						X
	CT PANEL 2MP-3H		•						X
	CT PANEL 2MP-1L		•						X
	CT PANEL 2LDP		•						X
	CT PANEL 2LP-1A		•						X
	CT PANEL 2LP-2A		•						X
	CT PANEL 2LP-3A		•						X
	CT PANEL 2RDP		•						X
	CT PANEL 2RP-0A		•						X
	CT PANEL 2RP-1A		•						X
	CT PANEL 2RP-1B		•						X
	CT PANEL 2RP-2A		•						X
	CT PANEL 2RP-2B		•						X
	CT PANEL 2RP-3A		•						X
	CT PANEL 2RP-3B		•						X

DRAWING NOTES:

1. ALL ENERGY USE MEASUREMENTS ARE TO BE DISPLAYED THROUGH THE BAS ON A SEPARATE DISPLAY.

2. CURRENT TRANSFORMERS TO HAVE SECONDARY CONTACTS FOR FUTURE USE.

3. SEE DRAWING E4.01 FOR ADDITIONAL INFORMATION.

CURRENT TRANSFORMER RISER DIAGRAM

boora

Boora Architects Inc.
720 SW Washington Suite 800
Portland, OR 97205
T. 503.226.1575 F. 503.241.7429
www.boora.com

dbHMS
design build engineering
303 W. Erie Street, Suite 510 Chicago, IL 60654
office: 312.915.0557
fax: 312.915.0558
website: www.dbhms.com

BENJAMIN RUBACH REGISTERED No. PE11100371 STATE OF INDIANA PROFESSIONAL ENGINEER

Earlham College Science Complex
Phase 2
801 National Road West
Richmond, IN 47374-4095

MARK	DATE	DESCRIPTION

Issued: February 28 , 2014
Scale: 12" = 1'-0"

Copyright

CONFORMED SET

CURRENT TRANSFORMER RISER DIAGRAM

M705

2/21/2014 3:32:09 PM

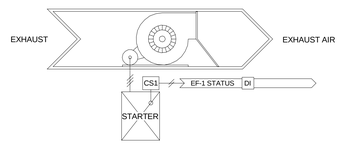

SEQUENCE OF OPERATION:

THE EXHAUST FAN WILL BE ACTIVATED BY THE FIRE ALARM SYSTEM PROVIDED BY OTHERS. BAS TO MONITOR STATUS OF SMOKE EVACUATION FANS.

ALARMS, INTERLOCKS & SAFETIES:

- SEND AN ALARM TO THE FMCS OPERATOR INTERFACE IF THE SMOKE EVACUATION FAN STATUS BECOMES ACTIVE.

10 SMOKE EVACUATION FAN
DETAIL IS NOT TO SCALE

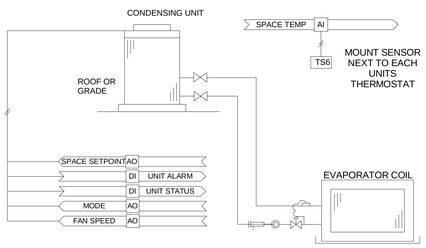

SEQUENCE OF OPERATION:

EACH VRF UNIT WILL MODULATE BASED ON THE MANUFACTURERS CONTROL SEQUENCE TO MAINTAIN A SPACE TEMPERATURE SETPOINT OF 72°F (ADJ.).

ALARMS, INTERLOCKS & SAFETIES:

- SEND AN ALARM TO THE FMCS OPERATOR INTERFACE IF ANY ALARM IS TRIGGERED BY THE UNIT AND INDICATE WHAT THE ALARM IS.

9 SPLIT SYSTEM AIR CONDITIONER AC-1,2,3,4
DETAIL IS NOT TO SCALE

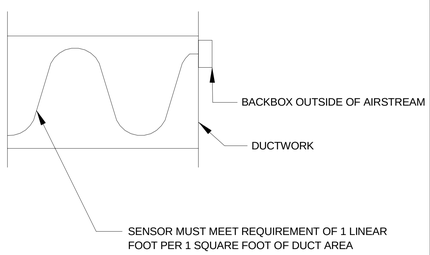

8 MIXED AIR TEMPERATURE SENSOR
DETAIL IS NOT TO SCALE

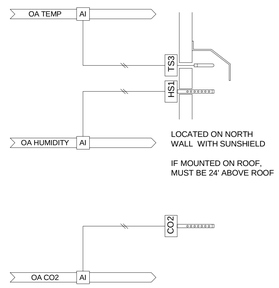

7 OUTSIDE AIR SENSORS
DETAIL IS NOT TO SCALE

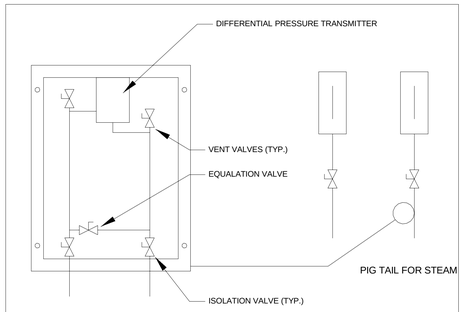

6 DIFFERENITAL PRESSURE TRANSMITTER
DETAIL IS NOT TO SCALE

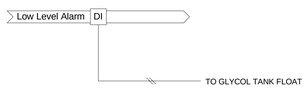

5 GLYCOL FILL SYSTEM LOW LEVEL ALARM
DETAIL IS NOT TO SCALE

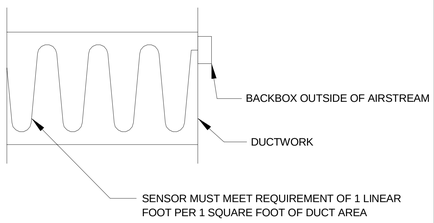

4 FREEZE PROTECTION THERMOSTAT
DETAIL IS NOT TO SCALE

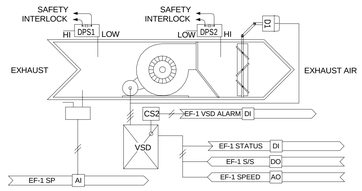

SEQUENCE OF OPERATION:

THE EXHAUST FAN WILL BE ACTIVATED BASED ON AN OCCUPIED SCHEDULE AS DETERMINED BY THE BAS. THE FAN SPEED WILL MODULATE TO MAINTAIN A DUCT STATIC PRESSURE SET POINT (ADJ.). A MOTORIZED BACK DRAFT DAMPER SHALL BE INTERLOCKED TO OPEN WHENEVER THE EXHAUST FAN IS ENABLED.

ALARMS, INTERLOCKS & SAFETIES:

- SEND AN ALARM TO THE FMCS OPERATOR INTERFACE IF THE FAN STATUS DOES NOT MATCH THE FAN COMMAND AFTER 5 MINUTES (ADJ.).
- SEND AN ALARM TO THE FMCS OPERATOR INTERFACE IF THE STATIC PRESSURE DROPS BELOW .3 IN WC. (ADJ.) AFTER 1 MINUTE OF OPERATION AND DISABLE FAN FOR 15 MINUTES (ADJ.). STATIC PRESSURE SWITCH TO DISCONNECT FAN IF STATIC PRESSURE DROPS BELOW .2 IN WC (ADJ.).

3 RESTROOM AND JANITOR EXHAUST FAN
DETAIL IS NOT TO SCALE

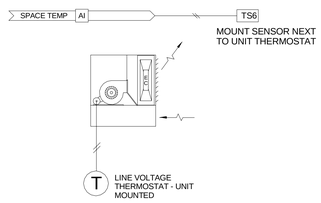

SEQUENCE OF OPERATION:

THE UNIT HEATER WILL BE FURNISHED WITH A UNIT MOUNTED FAN SPEED SELECTOR SWITCH (OFF-HIGH-MED-LOW).

THE UNIT WILL BE CONTROLLED BY A UNIT MOUNTED THERMOSTAT PROVIDED BY THE MANUFACTURER. WHEN THE THERMOSTAT SENDS A SIGNAL FOR HEATING, THE UNIT HEATER COIL WILL BE ENERGIZED, THE FAN WILL START. WHEN THE THERMOSTAT SATISFIES, THE UNIT HEATER WILL TURN OFF, THE COIL DE-ENERGIZED AND FAN OFF.

ALARMS, INTERLOCKS & SAFETIES:

- SEND AN ALARM TO THE FMCS OPERATOR INTERFACE IF SPACE TEMPERATURE FALLS 10 DEG F (ADJ.) BELOW SETPOINT AS MEASURED BY THE SPACE TEMPERATURE SENSOR.

2 ELECTRIC CABINET UNIT HEATER
DETAIL IS NOT TO SCALE

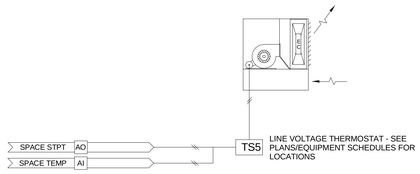

SEQUENCE OF OPERATION:

THE CABINET HEATER WILL BE FURNISHED WITH A UNIT MOUNTED FAN SPEED SELECTOR SWITCH (OFF-HIGH-MED-LOW).

THE UNIT WILL BE CONTROLLED BY A LINE VOLTAGE THERMOSTAT. WHEN THE THERMOSTAT SENDS A SIGNAL FOR HEATING, THE COIL WILL BE ENERGIZED AND THE FAN SHALL START.

A DEAD BAND WILL BE ADDED TO ELIMINATE EXCESSIVE CYCLING OF THE FAN.

ALARMS, INTERLOCKS & SAFETIES:

- SEND AN ALARM TO THE FMCS OPERATOR INTERFACE IF SPACE TEMPERATURE FALLS 10 DEG F (ADJ.) BELOW SETPOINT AS MEASURED BY THE SPACE TEMPERATURE SENSOR.

1 BATHROOM ELECTRIC CABINET UNIT HEATER
DETAIL IS NOT TO SCALE

POINTS LIST

ADDRESS	POINT DESCRIPTOR	POINT TYPE DI	AI	DO	AO	VP	ALARM	REMARKS	TREND
	SEF-1 STATUS	•							X
	GFS LOW LEVEL ALARM	•					X		
	OUTSIDE AIR TEMP		•						X
	OA HUMIDITY		•						X
	OA CO2		•						X
	SPACE TEMP		•					TYP EACH	X
	SPACE SETPOINT				•			TYP EACH	X
	EF-1 STATIC PRESS		•						X
	EF-1 VSD ALARM	•					X		
	EF-1 STATUS	•							X
	EF-1 S/S			•					X
	EF-1 SPEED				•				X
	AC SPACE TEMP		•					TYP EACH	X
	AC SPACE SETPOINT				•			TYP EACH	X
	UNIT ALARM	•					X	TYP EACH	
	UNIT STATUS	•						TYP EACH	X
	MODE				•			TYP EACH	X
	FAN SPEED				•			TYP EACH	X

DRAWING NOTES:

1. CONTROL DRAWINGS DO NOT INCLUDE ALL HYDRONIC PIPING DEVICES. REFER TO SYSTEM SCHEMATICS FOR COMPLETE PIPING LAYOUT.

boora

Boora Architects Inc.
720 SW Washington Suite 800
Portland, OR 97205
T. 503.226.1575 F. 503.241.7429
www.boora.com

dbHMS
design build engineering
303 W. Erie Street, Suite 510 Chicago, IL 60654
office: 312.915.0557
fax: 312.915.0558
website: www.dbhms.com

BENJAMIN RUBACH REGISTERED No. PE11100371 STATE OF INDIANA PROFESSIONAL ENGINEER

Earlham College Science Complex
Phase 2
801 National Road West
Richmond, IN 47374-4095

MARK	DATE	DESCRIPTION

Issued: February 28 , 2014
Scale: NTS

Copyright

CONFORMED SET

CONTROLS DETAILS

M706

2/21/2014 3:32:10 PM

1 M7.06 Controls Details
12" = 1'-0"

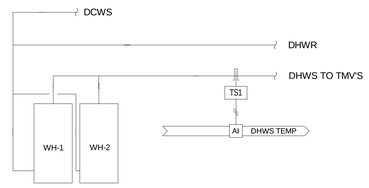

DOMESTIC HOT WATER SEQUENCE OF OPERATIONS

A. HOT WATER DISCHARGE TEMPERATURE IS TO BE MONITORED USING A WELL TEMPERATURE SENSOR.
B. SEND AN ALARM TO THE FMCS IF THE DHW DISCHARGE WATER TEMPERATURE DROPS BELOW 130F FOR 10 MINUTES (ADJ.).

3 DOMESTIC HOT WATER TEMPERATURE MONITORING

DETAIL IS NOT TO SCALE

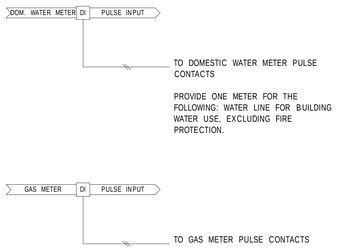

METERING NOTES:

PROVIDE FLOW METERS FOR GAS AND DOMESTIC WATER THAT ALLOW FOR COMMUNICATION WITH THE BUILDING AUTOMATION SYSTEM USING A BACNET INTERFACE. PROVIDE SIEMENS SITRANS F O FLOW METER OR EQUIVALENT.

5 UTILITY METERING

DETAIL IS NOT TO SCALE

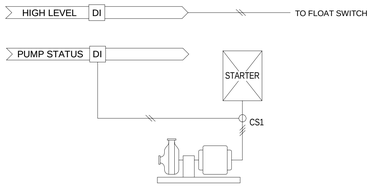

SUMP PUMP SEQUENCE OF OPERATIONS

A. GENERAL: SUMP PUMP SHALL BE CONTROLLED BY INTEGRAL FLOAT SWITCH AND BE STAND ALONE IN OPERATION.
B. BAS SHALL MONITOR PUMP RUN STATUS THROUGH THE USE OF A CURRENT SWITCH.
C. HIGH LEVEL ALARM SHALL BE GENERATED AT THE BAS WHEN THE LIQUID LEVEL RISES ABOVE THE HIGH LEVEL SENSOR FOR 5 MINUTES WITHOUT THE PUMP ENABLING AND THE LEVEL RETURNING TO NORMAL.

2 SUMP PUMP

DETAIL IS NOT TO SCALE

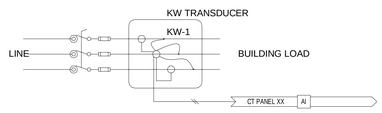

TYPICAL FOR EACH SUBMETER PANEL :
SEE SHEET M7.05 FOR DETAILS

4 ELECTRICAL SUBMETERING

DETAIL IS NOT TO SCALE

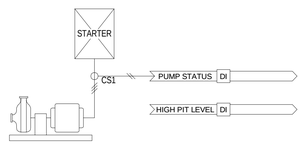

SEWAGE EJECTOR PUMP SEQUENCE OF OPERATIONS

A. GENERAL: SEWER EJECTOR PUMP SHALL BE CONTROLLED BY INTEGRAL FLOAT SWITCH AND BE STAND ALONE IN OPERATION.
B. BAS SHALL MONITOR PUMP RUN STATUS THROUGH THE USE OF A CURRENT SWITCH.
C. HIGH LEVEL ALARM SHALL BE GENERATED AT THE BAS WHEN THE LIQUID LEVEL RISES ABOVE THE HIGH LEVEL SENSOR FOR 5 MINUTES WITHOUT THE PUMP ENABLING AND THE LEVEL RETURNING TO NORMAL.

1 SEWAGE EJECTOR PUMP

DETAIL IS NOT TO SCALE

POINTS LIST

ADDRESS	POINT DESCRIPTOR	POINT TYPE DI	AI	DO	AO	VP	ALARM	REMARKS	TREND
	DHWS TEMP			*			X		X
	HIGH LEVEL	*					X	SUMP PUMP	X
	PUMP STATUS	*						SUMP PUMP	X
	HIGH PIT LEVEL		*				X	SEWAGE EJECTOR	X
	PUMP STATUS		*					SEWAGE EJECTOR	X
	GAS METER	*							X
	DOMESTIC WATER METER	*							X
	CT PANEL XX		*					SEE M7.05	X

DRAWING NOTES:

1. CONTROL DRAWINGS DO NOT INCLUDE ALL HYDRONIC PIPING DEVICES. REFER TO SYSTEM SCHEMATICS FOR COMPLETE PIPING LAYOUT.

N

boora

Boora Architects Inc.
720 SW Washington Suite 800
Portland, OR 97205
T. 503.226.1575 F. 503.241.7429
www.boora.com

dbHMS
design build engineering
303 W. Erie Street, Suite 510 Chicago, IL 60654
office: 312.915.0557
fax: 312.915.0558
website: www.dbhms.com

BENJAMIN RUBACH REGISTERED No. PE11100371 STATE OF INDIANA PROFESSIONAL ENGINEER

Earlham College Science Complex
Phase 2
801 National Road West
Richmond, IN 47374-4095

MARK	DATE	DESCRIPTION

Issued: February 28 , 2014
Scale: 12" = 1'-0"

Copyright

CONFORMED SET

CONTROLS DETAILS

M707

2/21/2014 3:32:12 PM