GENERAL NOTES

1. THESE DRAWINGS, TOGETHER WITH THE SPECIFICATION DOCUMENTS ACCOMPANYING THEM, ARE INTENDED TO DEPICT THE INSTALLATION REQUIREMENTS NECESSARY TO SUPPORT THIS PROJECT. CONTRACTOR SHALL FURNISH MATERIALS SHOWN AND/OR CALLED FOR ON THE DRAWINGS BUT NOT MENTIONED IN THE SPECIFICATION DOCUMENTS, OR VICE VERSA, THAT ARE NECESSARY FOR THE INSTALLATION AND SUPPORT OF TECHNOLOGY SYSTEMS, WHETHER OR NOT SPECIFICALLY CALLED FOR IN BOTH. IN ADDITION, CONTRACTOR SHALL PROVIDE INCIDENTAL EQUIPMENT AND MATERIALS REQUIRED FOR THE COMPLETION OF SYSTEMS INCLUDED IN THIS CONTRACT WHETHER OR NOT SPECIFIED OR SHOWN ON THE DRAWINGS.
2. EACH CONTRACTOR SHALL BE KNOWLEDGEABLE OF WORK TO BE PERFORMED BY OTHER TRADES AND TAKE NECESSARY STEPS TO INTEGRATE AND COORDINATE THEIR WORK WITH OTHER TRADES.
3. THE CONTRACTOR SHALL BE RESPONSIBLE FOR FURNISHING ALL MATERIALS ON THE DRAWINGS OR AS SPECIFIED HEREIN FOR FUNCTIONAL AND COMPLETE TELECOMMUNICATIONS, ELECTRONIC ACCESS CONTROL, & AUDIO/VISUAL SYSTEMS.
4. ALL TECHNOLOGY INFRASTRUCTURE SHALL BE INSTALLED IN AN AESTHETICALLY PLEASING FASHION.
5. ALL TECHNOLOGY INFRASTRUCTURE SHALL BE INSTALLED FOR OPTIMAL PERFORMANCE.
6. ALL TECHNOLOGY INFRASTRUCTURE SHALL BE INSTALLED FOR EASY MOVES, ADDS, AND CHANGES IN THE FUTURE.
7. ALL WORK PERFORMED IN OCCUPIED SPACES SHALL BE IN A MANNER THAT ALLOWS THE OWNER TO OPERATE THE EXISTING FACILITIES ON A CONTINUOUS BASIS.
8. OWNER SHALL PROVIDE AND INSTALL ALL NETWORK SWITCHES AND UNINTERRUPTED POWER SUPPLIES FOR NETWORK SYSTEMS. ALL WIRELESS ACCESS POINTS SHALL BE PROVIDED BY THE OWNER AND INSTALLED BY THE CONTRACTOR.

CABLING STANDARD/CODE COMPLIANCE REQUIREMENTS

1. ANSI/TIA 568-C.0 - GENERAL TELECOMMUNICATIONS CABLING FOR CUSTOMER PREMISES.
2. ANSI/TIA 568-C.1 - COMMERCIAL BUILDING TELECOMMUNICATIONS STANDARD.
3. ANSI/TIA 568-C.2 - BALANCED TWISTED PAIR TELECOMMUNICATIONS CABLING AND COMPONENTS STANDARDS.
4. TIA 569-B - COMMERCIAL BUILDING STANDARD FOR TELECOMMUNICATIONS PATHWAYS AND SPACES.
5. TIA 569-B-1 - COMMERCIAL BUILDING STANDARD FOR TELECOMMUNICATIONS PATHWAYS AND SPACES. ADDENDUM 1 - TEMPERATURE AND HUMIDITY REQUIREMENTS FOR TELECOMMUNICATION SPACES.
6. ANSI/TIA/EIA-606-A - ADMINISTRATIVE STANDARD FOR COMMERCIAL TELECOMMUNICATIONS INFRASTRUCTURE (INCLUDING ERRATA SHEET FOR ANSI/TIA/EIA-606-A).
7. ANSI-J-STD-607-A - COMMERCIAL BUILDING GROUNDING (EARTHING) AND BONDING REQUIREMENTS FOR TELECOMMUNICATIONS.
8. ANSI/TIA-758-A - CUSTOMER OWNED OUTSIDE PLANT TELECOMMUNICATIONS INFRASTRUCTURE STANDARD
9. BICSI - TELECOMMUNICATIONS DISTRIBUTION METHODS MANUAL (TDMM).

TELECOMMUNICATION PATHWAY NOTES

1. ALL TELECOMMUNICATION PATHWAY SYSTEMS SHALL BE INDEPENDENTLY SUPPORTED FROM AND ATTACHED TO THE BUILDING STRUCTURE.
2. ALL TELECOMMUNICATION PATHWAY SYSTEMS SHALL BE COMPLETELY AND PROPERLY LABELED AS REQUIRED IN REFERENCED STANDARDS.
3. CONDUIT SYSTEMS SHALL BE PROVIDED FOR ALL PATHWAYS IN INACCESIBLE CEILING SPACES AND WHERE EXPOSED TO PUBLIC VIEW. ALL CONDUIT SYSTEMS THROUGHOUT THE BUILDING SHALL INCLUDE PROPERLY SIZED SLEEVED PENETRATIONS THROUGH ALL BARRIERS.
4. ALL TELECOMMUNICATIONS OUTLET BOXES SHALL BE A MINIMUM DOUBLE GANG BOX NO LESS THAN 2½" DEEP.
5. ALL CABLE TRAY SHALL BE PROVIDED AS SHOWN ON THE T-SERIES DRAWINGS. REFER TO DIVISION 27 SPECIFICATIONS FOR ADDITIONAL PRODUCT DETAILS AND REQUIREMENTS.
6. CONTRACTOR SHALL NOT EXCEED 40% FILL RATIO WITHIN ANY CONDUIT MEANT FOR TELECOMMUNICATION CABLING. CONTRACTOR SHALL CALCULATE FILL RATIOS BASED ON ACTUAL CATEGORY 6a CABLING USED. TYPICAL FILL RATIOS FOR CATEGORY 6a CABLE ARE SHOWN BELOW FOR REFERENCE PURPOSES ONLY:

1" EMT	=	4 CABLES
1¼" EMT	=	7 CABLES
1½" EMT	=	12 CABLES
2" EMT	=	18 CABLES
3" EMT	=	51 CABLES
4" EMT	=	85 CABLES

7. CONDUIT RUNS SHALL NOT INCLUDE MORE THAN TWO 90° BENDS BETWEEN PULLING POINTS. IF THE PATH OF THE CONDUIT RUN REQUIRES BENDS EXCEEDING A TOTAL OF 180°, INSTALLATION OF AN APPROPRIATELY SIZED JUNCTION BOX IS REQUIRED.
8. CONTRACTOR SHALL PROVIDE FIRE STOPS TO SEAL ALL PENETRATIONS THROUGH FLOORS, WALLS, STAIRS, AND ELEVATORS AS NECESSARY TO MEET CODE REQUIREMENTS. FIRE STOPS SHALL BE PPROVIDED IN ACCORDANCE WITH ALL APPLICABLE CODES AND STANDARDS.
9. CONTRACTOR SHALL PROVIDE PROPERLY RATED FIRE PILLOWS FOR ALL CONDUIT AND/OR CABLE TRAY ENTERING THE TELECOMMUNICATIONS ROOMS. EACH CONTRACTOR IS RESPONSIBLE FOR SEALING PENETRATIONS AFTER EACH SCOPE OF WORK IS COMPLETED.

HORIZONTAL CABLING NOTES

1. MINIMUM CATEGORY 6a COMPLIANT 4-PAIR UNSHIELDED TWISTED PAIR (UTP). ALL HORIZONTAL CABLING MUST BE PLENUM RATED.
2. MANUFACTURER CERTIFIED INCLUDING MINIMUM 25 YEAR PERFORMANCE AND APPLICATIONS WARRANTY.
3. PAINTING OF THE STRUCTURED CABLING WILL VOID THE WARRANTY. ENSURE PROPER COORDINATION WITH PAINTING CONTRACTOR SO THAT ALL STRUCTURED CABLING IS PROTECTED PRIOR TO ANY PAINTING.
4. PROVIDE A MINIMUM 10 FOOT MAINTENANCE LOOP ON EACH HORIZONTAL CABLING RUN. MAINTENANCE LOOPS SHALL BE STORED ABOVE ACCESIBLE CEILINGS, IN CABLE TRAY, AND IN TELECOMMUNICATION ROOM CABLE TRAY. CABLING ABOVE CEILING SHALL BE SUSPENDED FROM APPRORIATE SUPPORTS AND SHALL NOT TOUCH THE CEILING.
5. ALL PIN/PAIR ASSIGNMENTS SHALL BE T568B.
6. CABLE JACKET COLOR SHALL BE BLUE UNLESS SPECIFICALLY NOTED OTHERWISE.
7. LABELING SHALL BE COMPLETED AS DEFINED IN THE CONTRACT DOCUMENTS AND SHALL BE COORDINATED WITH THE OWNER.
8. PROVIDE ALL TELECOMMUNICATION OUTLETS AS SHOWN ON THE DRAWINGS AND AS REQUIRED TO PROVIDE CONNECTIONS FOR EACH DEVICE SHOWN ON THE DRAWINGS.
9. ALL TESTING OF HORIZONTAL CABLING SHALL BE COMPLETED AS DIRECTED BY THE PROJECT SPECIFICATIONS. ALL CABLING MUST BE TESTED AND CERTIFIED TO THE APPLICABLE STANDARDS.

VIDEO SECURITY SYSTEM AND ACCESS CONTROL NOTES

1. CONTRACTOR SHALL PROVIDE ROUGH-INS FOR VIDEO SECURITY CAMERA LOCATIONS AS SHOWN ON THE DRAWINGS. CAMERAS AND LICENSES SHALL BE PROVIDED BY THE OWNER AFTER PROJECT COMPLETION.
2. CONTRACTOR SHALL PROVIDE THE CBORD ACCESS CONTROL SYSTEM AND ITS COMPONENTS PER THE CONTRACT DOCUMENTS.
3. ALL ELECTRONICALLY CONTROLLED OPENINGS SHALL BE FUNCTIONAL AND COMPLETE PER THE CONTRACT DOCUMENTS.
4. ACCESS CONTROL SYSTEM SHALL BE FULLY INTEGRATED WITH THE OWNERS EXISTING CBORD SYSTEM.

AUDIO/VISUAL NOTES

1. WALL MOUNTED SHORT THROW PROJECTORS SHALL BE PROVIDED AS SHOWN ON THE DRAWINGS. INSTALL ACCORDING TO MANUFACTURER RECOMMENDATIONS.
2. CEILING MOUNTED PROJECTORS SHALL BE PROVIDED AS SHOWN ON THE DRAWINGS. INSTALL ACCORDING TO MANUFACTURER RECOMMENDATIONS.
3. CONTRACTOR SHALL PROVIDE ALL AUDIO VIDEO PATCH CORDS, CONNECTORS, AND TERMINATIONS REQUIRED FOR A FUNCTIONAL AND COMPLETE SYSTEM IN EACH SPACE.
4. CONTRACTOR SHALL PROVIDE ALL INSERT MODULES NECESSARY FOR XTP MATRIX SWITCHERS TO ACCOMODATE ALL INPUTS AND OUTPUTS REQUIRED IN EACH SPACE.

TECHNOLOGY LEGEND

▼	VOICE ONLY LOCATION
▽	STANDARD DATA LOCATION
◇	CEILING DATA LOCATION
FB	FLOOR BOX LOCATION
A/V	WALL A/V INPUT LOCATION
A/V	A/V FLOOR BOX INPUT LOCATION
CP	A/V CONTROL PANEL LOCATION
A/V RACK	A/V EQUIPMENT RACK LOCATION
LCD RI	TELEVISION ROUGH-IN LOCATION
DS	DIGITAL SIGNAGE LOCATION
P	CEILING PROJECTOR LOCATION
STP	SHORT THROW PROJECTOR LOCATION
	RETRACTABLE PROJECTOR SCREEN LOCATION
S	CEILING SPEAKER LOCATION
S	CEILING SECURITY CAMERA LOCATION
CR	WIRED CARD READER LOCATION
AP	WIRELESS ACCESS POINT LOCATION
VC	VIDEO CONFERENCING CAMERA ROUGH-IN LOCATION

boora

Boora Architects, Inc.
720 SW Washington, Suite 800
Portland, OR 97205
T. 503.226.1575 F. 503.241.7429
www.boora.com

DESIGN 27 TECHNOLOGY + ACOUSTICS
740 E. 52ND STREET, STE. 6
INDIANAPOLIS, IN 46205
317.536.8000
WWW.DESIGN27.COM

BICSI REGISTERED COMMUNICATIONS DISTRIBUTION DESIGNER
MATTHEW J. CONNOLLY
REG. NO. 153914R
EXPIRES 12-31-15
RCDD
SIGNATURE

Earlham College Science Complex
Phases 2
801 National Road West
Richmond, IN 47374-4095

MARK	DATE	DESCRIPTION

Issued: February 28th, 2014
Scale: N.T.S.

Copyright
Boora Project Number: 12009

CONFORMED SET

GENERAL NOTES AND SYMBOLS

T000

2/26/2014 1:45:40 PM

GENERAL NOTES

1. CONRACTOR SHALL CONFIRM ALL EXISTING PATHWAYS ARE ACCEPTABLE PRIOR TO NEW CABLE INSTALLATION.
2. CONTRACTOR IS RESPONSIBLE FOR ALL FINAL DISTANCE/LENGTH CALCULATIONS FOR ALL CONDUIT AND CABLES INSTALLED.

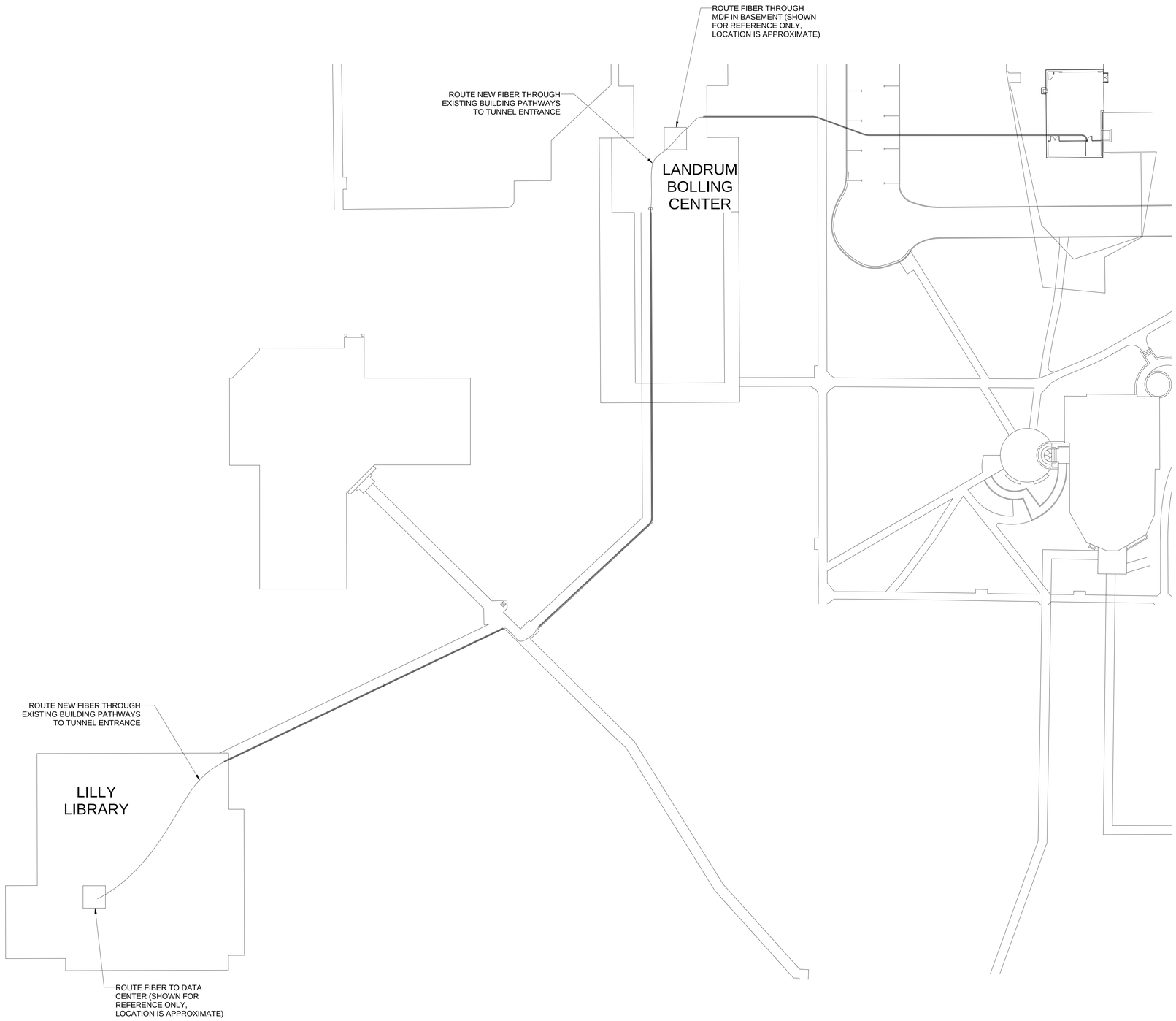

1 TELECOMMUNICATIONS SITE PLAN
1" = 30'-0"

2/26/2014 1:46:07 PM

boora

Boora Architects, Inc.
720 SW Washington, Suite 800
Portland, OR 97205
T. 503.226.1575 F. 503.241.7429
www.boora.com

DESIGN 27 TECHNOLOGY + ACOUSTICS
740 E. 52ND STREET, STE. 6
INDIANAPOLIS, IN 46205
317.536.8000
WWW.DESIGN27.COM

REGISTERED COMMUNICATIONS DISTRIBUTION DESIGNER
Bicsi
MATTHEW J. CONNOLLY
REG. NO. 153914R
EXPIRES 12-31-15
RCDD
SIGNATURE

Earlham College Science Complex
Phases 2
801 National Road West
Richmond, IN 47374-4095

MARK	DATE	DESCRIPTION

Issued: February 28th, 2014
Scale: As indicated

Copyright
Boora Project Number: 12009

CONFORMED SET

TELECOMMUNICATIONS SITE PLAN

T001

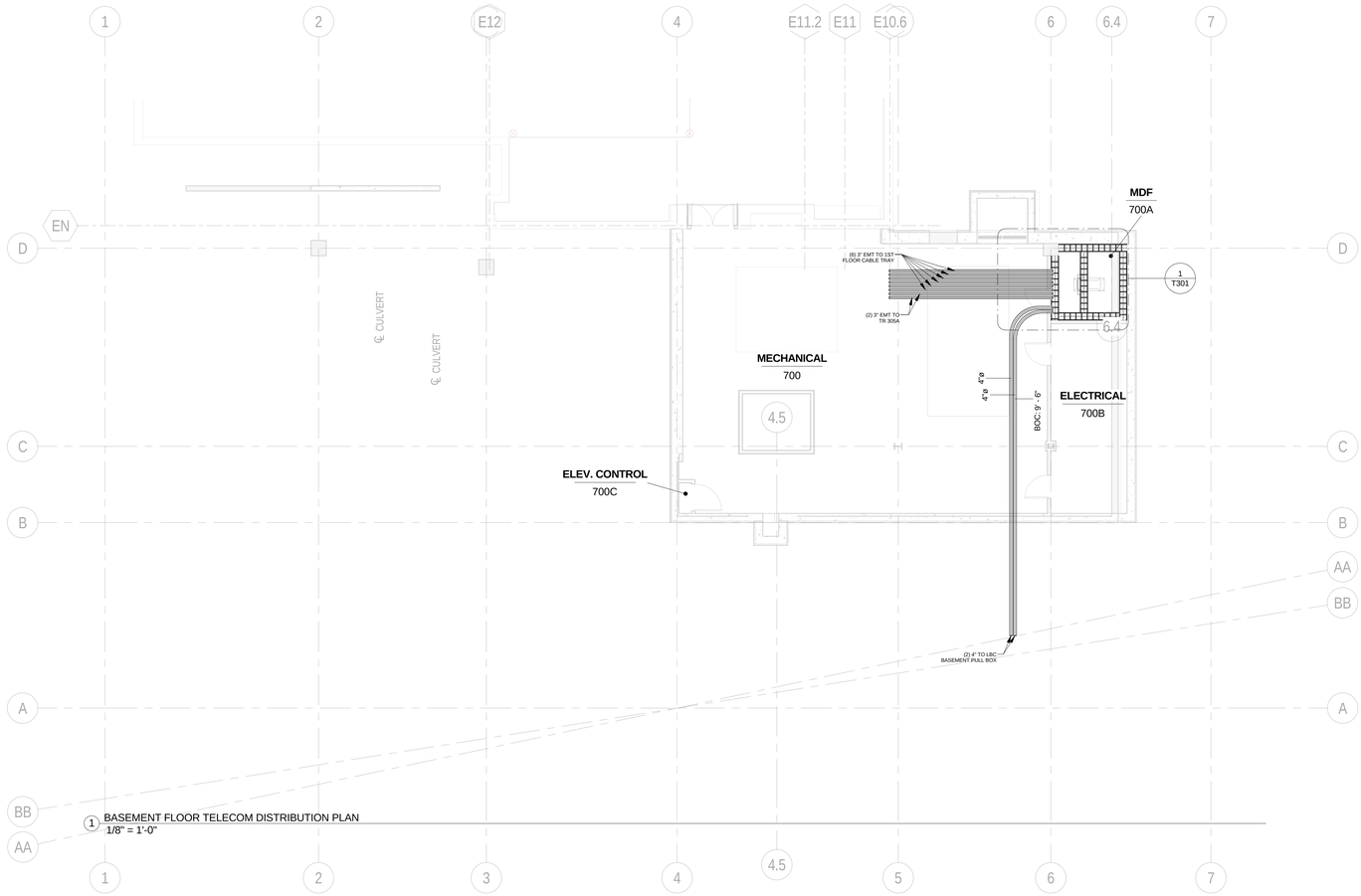

1 BASEMENT FLOOR TELECOM DISTRIBUTION PLAN
1/8" = 1'-0"

2/26/2014 1:46:43 PM

boora

Boora Architects, Inc.
720 SW Washington, Suite 800
Portland, OR 97205
T. 503.226.1575 F. 503.241.7429
www.boora.com

DESIGN 27 TECHNOLOGY + ACOUSTICS
740 E. 52ND STREET, STE. 6
INDIANAPOLIS, IN 46205
317.536.8000
WWW.DESIGN27.COM

REGISTERED COMMUNICATIONS DISTRIBUTION DESIGNER
Bicsi
MATTHEW J. CONNOLLY
REG. NO. 153914R
EXPIRES 12-31-15
RCDD
SIGNATURE

Earlham College Science Complex
Phases 2

801 National Road West
Richmond, IN 47374-4095

MARK	DATE	DESCRIPTION

Issued: February 28th, 2014

Scale: 1/8" = 1'-0"

Copyright
Boora Project Number: 12009

CONFORMED SET

BASEMENT FLOOR DISTRIBUTION PLAN

T010

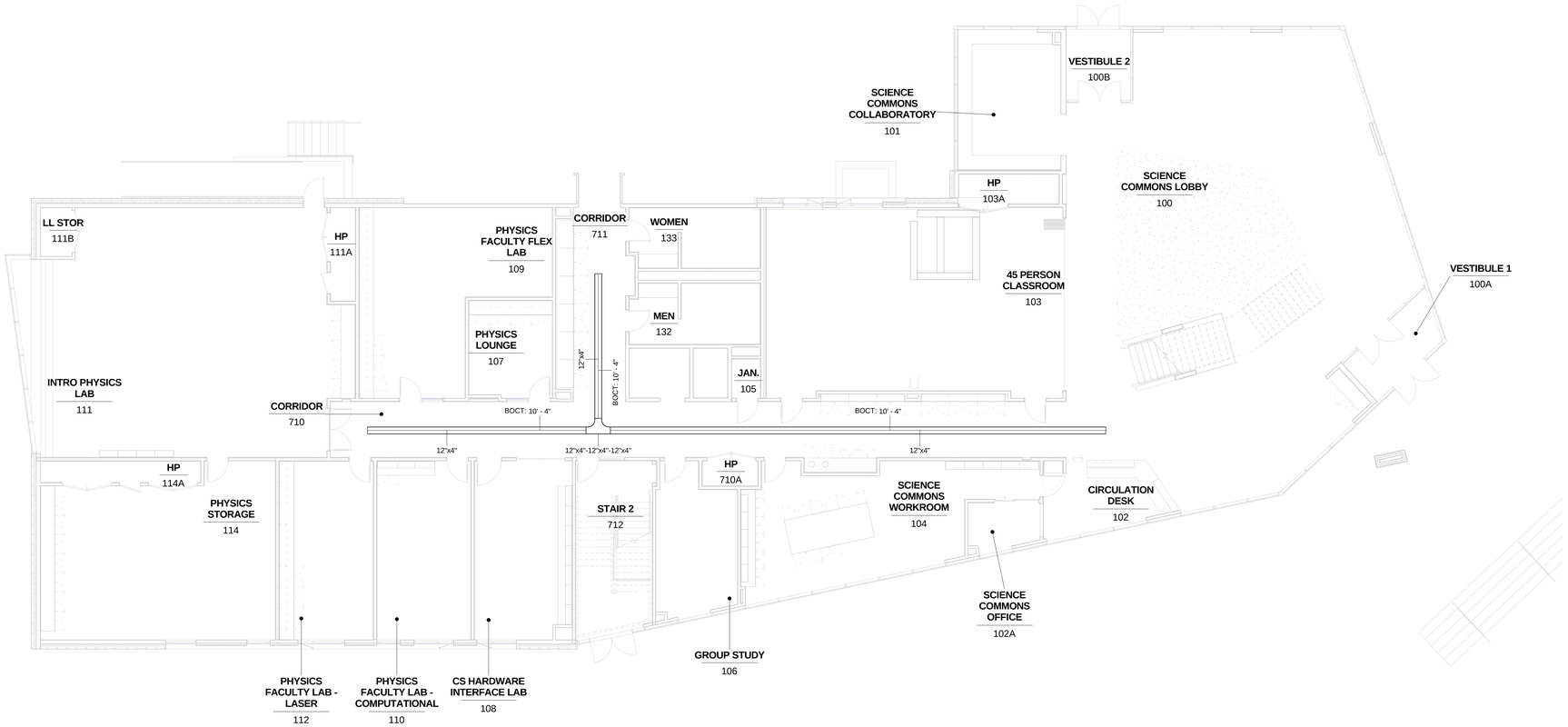

1 FIRST FLOOR TELECOM DISTRIBUTION PLAN
1/8" = 1'-0"

boora

Boora Architects, Inc.
720 SW Washington, Suite 800
Portland, OR 97205
T. 503.226.1575 F. 503.241.7429
www.boora.com

DESIGN 27 TECHNOLOGY + ACOUSTICS
740 E. 52ND STREET, STE. 6
INDIANAPOLIS, IN 46205
317.536.8000
WWW.DESIGN27.COM

REGISTERED COMMUNICATIONS DISTRIBUTION DESIGNER
BICSI
MATTHEW J. CONNOLLY
REG. NO. 153914R
EXPIRES 12-31-15
RCDD
SIGNATURE

Earlham College Science Complex Phases 2

801 National Road West
Richmond, IN 47374-4095

MARK	DATE	DESCRIPTION

Issued: February 28th, 2014
Scale: 1/8" = 1'-0"

Copyright
Boora Project Number: 12009

CONFORMED SET

FIRST FLOOR DISTRIBUTION PLAN

T011

2/26/2014 1:47:04 PM

1 SECOND FLOOR TELECOM DISTRIBUTION PLAN
1/8" = 1'-0"

2/26/2014 1:47:28 PM

boora

Boora Architects, Inc.
720 SW Washington, Suite 800
Portland, OR 97205
T. 503.226.1575 F. 503.241.7429
www.boora.com

DESIGN 27
TECHNOLOGY + ACOUSTICS
740 E. 52ND STREET, STE. 6
INDIANAPOLIS, IN 46205
317.536.8000
WWW.DESIGN27.COM

REGISTERED COMMUNICATIONS DISTRIBUTION DESIGNER
Bicsi
MATTHEW J. CONNOLLY
REG. NO. 153914R
EXPIRES 12-31-15
RCDD
SIGNATURE

Earlham College Science Complex Phases 2

801 National Road West
Richmond, IN 47374-4095

MARK	DATE	DESCRIPTION

Issued: February 28th, 2014
Scale: 1/8" = 1'-0"

Copyright
Boora Project Number: 12009

CONFORMED SET

SECOND FLOOR DISTRIBUTION PLAN

T012

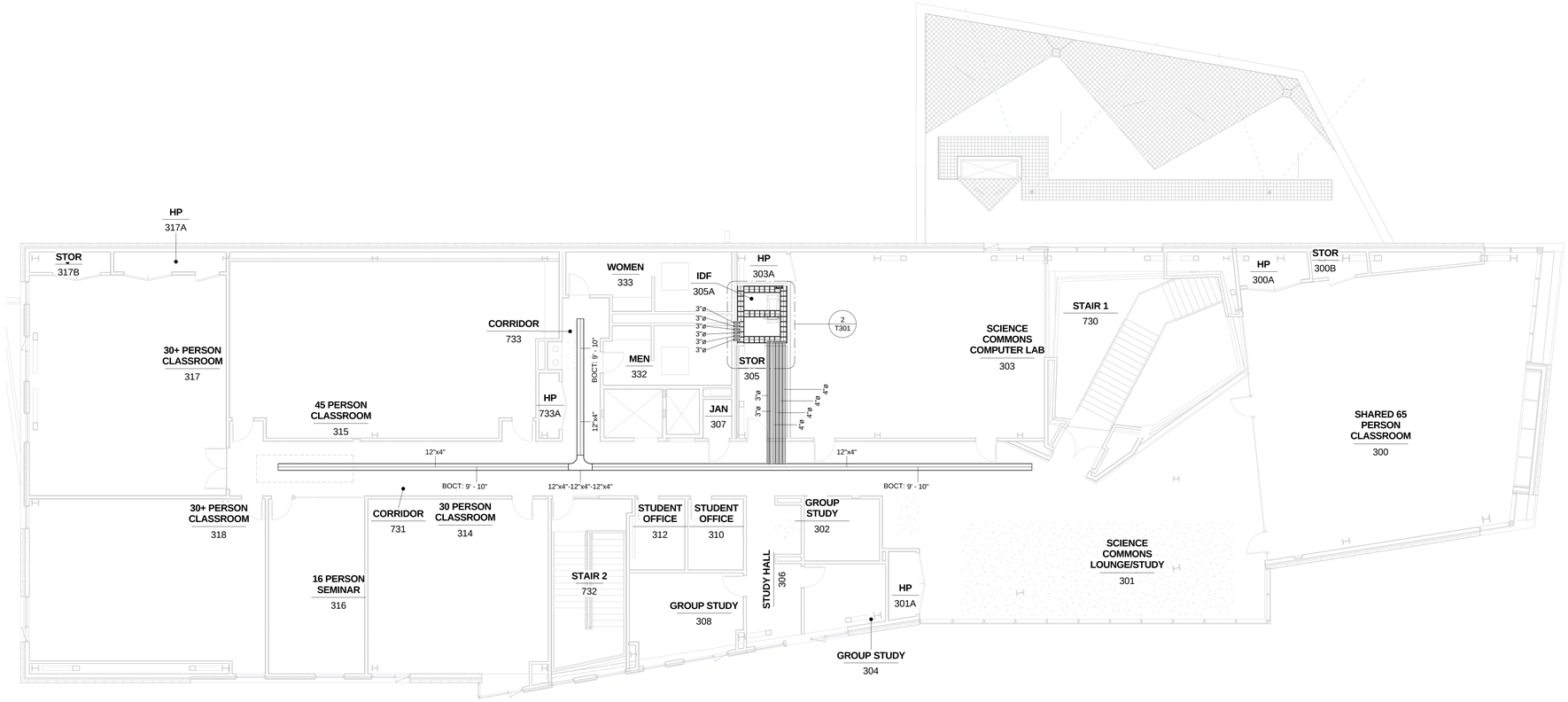

1 THIRD FLOOR TELECOM DISTRIBUTION PLAN
1/8" = 1'-0"

2/26/2014 1:47:40 PM

boora

Boora Architects, Inc.
720 SW Washington, Suite 800
Portland, OR 97205
T. 503.226.1575 F. 503.241.7429
www.boora.com

DESIGN 27
TECHNOLOGY + ACOUSTICS
740 E. 52ND STREET, STE. 6
INDIANAPOLIS, IN 46205
317.536.8000
WWW.DESIGN27.COM

REGISTERED COMMUNICATIONS DISTRIBUTION DESIGNER
BICSI
MATTHEW J. CONNOLLY
REG. NO. 153914R
EXPIRES 12-31-15
RCDD
SIGNATURE

Earlham College Science Complex Phases 2

801 National Road West
Richmond, IN 47374-4095

MARK	DATE	DESCRIPTION

Issued: February 28th, 2014
Scale: 1/8" = 1'-0"

Copyright
Boora Project Number: 12009

CONFORMED SET

THIRD FLOOR DISTRIBUTION PLAN

T013

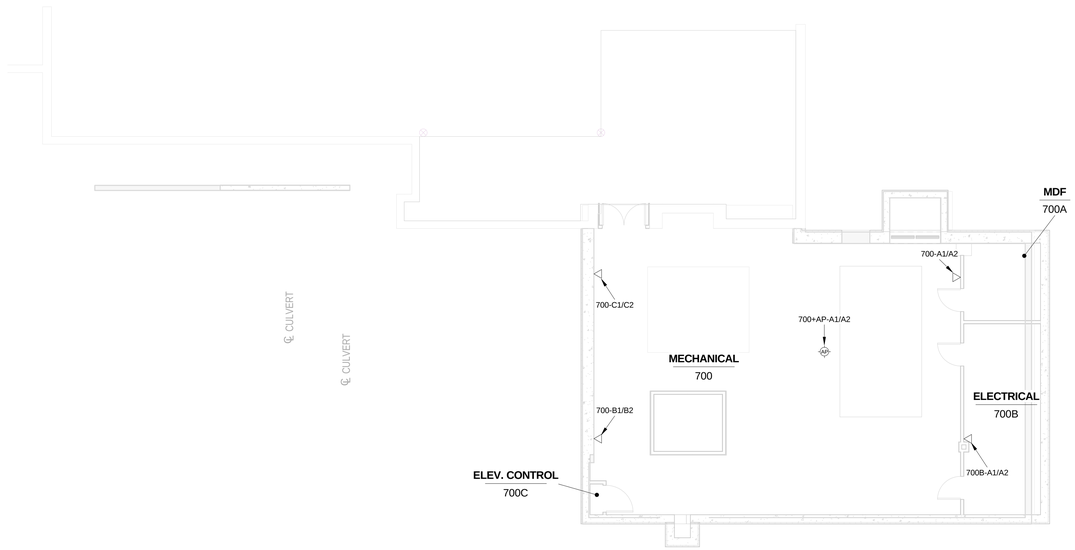

1 BASEMENT FLOOR TELECOM & AV PLAN
1/8" = 1'-0"

2/26/2014 1:47:52 PM

boora

Boora Architects, Inc.
720 SW Washington, Suite 800
Portland, OR 97205
T. 503.226.1575 F. 503.241.7429
www.boora.com

DESIGN 27
TECHNOLOGY
+ ACOUSTICS
740 E. 52ND STREET, STE. 6
INDIANAPOLIS, IN 46205
317.536.8000
WWW.DESIGN27.COM

REGISTERED COMMUNICATIONS DISTRIBUTION DESIGNER
Bicsi
MATTHEW J. CONNOLLY
REG. NO. 153914R
EXPIRES 12-31-15
RCDD
SIGNATURE

Earlham College Science Complex
Phases 2
801 National Road West
Richmond, IN 47374-4095

MARK	DATE	DESCRIPTION

Issued: February 28th, 2014
Scale: 1/8" = 1'-0"

Copyright
Boora Project Number: 12009

CONFORMED SET

BASEMENT TELECOM & AV PLAN

T100

SHEET NOTES

1. REFER TO "A/V DIAGRAM - TYPE A" FOR AUDIO VIDEO CONNECTIONS WITHIN THIS ROOM
2. A/V FLOORBOX - TYPE 1
3. RETRACTABLE PROJECTOR SCREEN WITH IMAGE SIZE OF 64" x 102" WITH THE BOTTOM OF THE IMAGE AT 4' 0" A.F.F.
4. CEILING DATA OUTLETS IN THIS ROOM SHALL BE MOUNTED TO UNISTRUT WITHIN ROOM (PROVIDED AND INSTALLED BY OTHERS)
5. FLOOR BOX LOCATION - TYPE 1
6. A/V FLOORBOX LOCATION - TYPE 2. PROVIDE (3) UTP JACKS AND (1) XLR JACK WITH CABLING AS REQUIRED (REFER TO A/V DIAGRAM - TYPE F)
7. MOVABLE LECTERN WITH AUDIO VIDEO RACK (REFER TO A/V DIAGRAM - TYPE F FOR A/V EQUIPMENT LAYOUT)
8. REFER TO "A/V DIAGRAM - TYPE F" FOR AUDIO VIDEO CONNECTIONS WITHIN THIS ROOM
9. A/V EQUIPMENT RACK (REFER TO A/V DIAGRAM - TYPE F FOR A/V EQUIPMENT LAYOUT)
10. FLOOR BOX LOCATION - TYPE 2
11. REFER TO "A/V DIAGRAM - TYPE B" FOR AUDIO VIDEO CONNECTIONS WITHIN THIS ROOM
12. PROJECTOR THROW DISTANCE DIMENSIONS ARE FOR REFERENCE ONLY - PROJECTORS SHALL BE MOUNTED TO ACHIEVE REQUIRED IMAGE SIZE WITH MINIMAL POST-INSTALLATION ADJUSTMENT

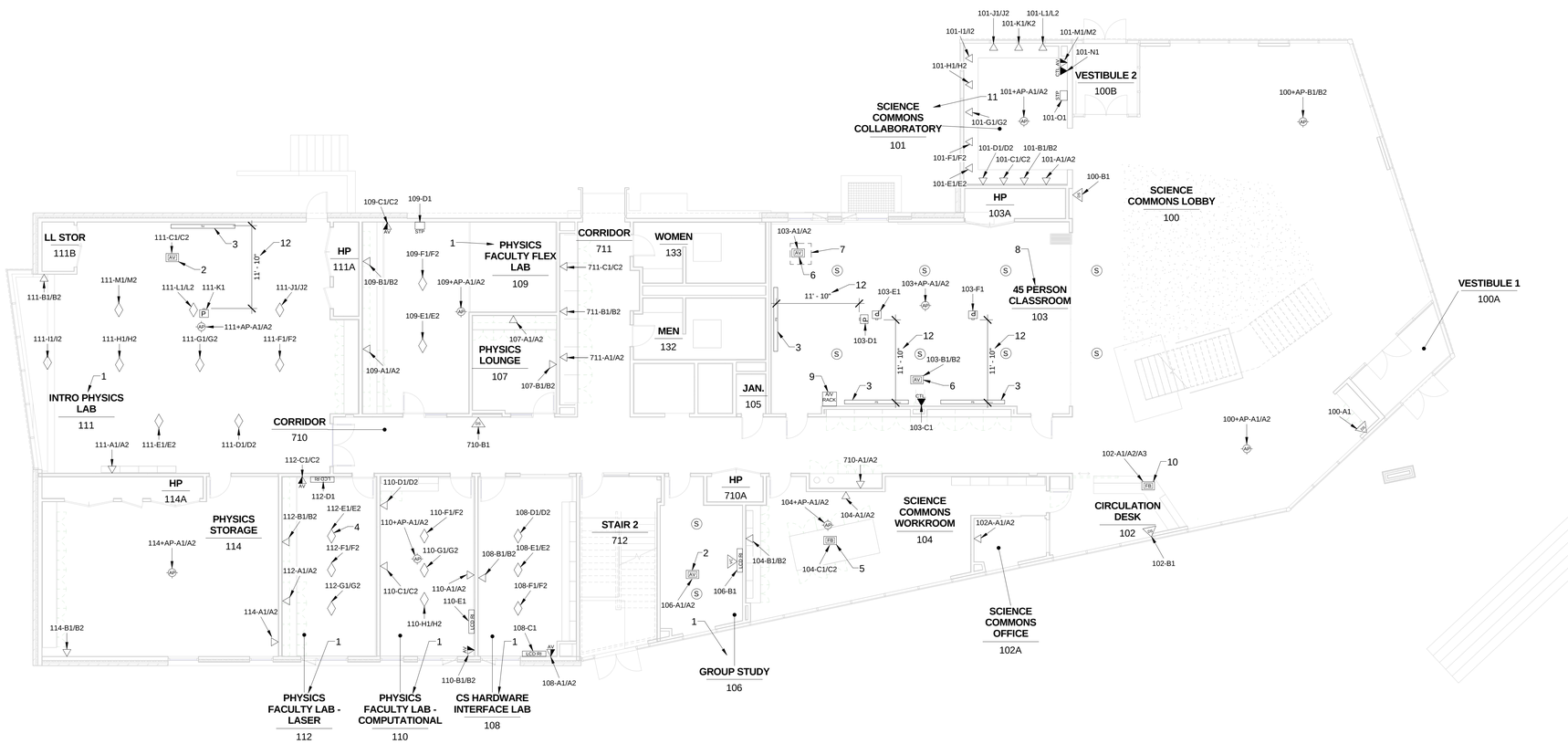

1 FIRST FLOOR TELECOM & AV PLAN
1/8" = 1'-0"

boora

Boora Architects, Inc.
720 SW Washington, Suite 800
Portland, OR 97205
T. 503.226.1575 F. 503.241.7429
www.boora.com

DESIGN 27 TECHNOLOGY + ACOUSTICS
740 E. 52ND STREET, STE. 6
INDIANAPOLIS, IN 46205
317.536.8000
WWW.DESIGN27.COM

REGISTERED COMMUNICATIONS DISTRIBUTION DESIGNER
Bicsi
MATTHEW J. CONNOLLY
REG. NO. 153914R
EXPIRES 12-31-15
RCDD
SIGNATURE

Earlham College Science Complex
Phases 2
801 National Road West
Richmond, IN 47374-4095

MARK	DATE	DESCRIPTION

Issued: February 28th, 2014
Scale: As indicated

Copyright
Boora Project Number: 12009

CONFORMED SET

FIRST FLOOR TELECOM & AV PLAN

T101

2/26/2014 1:48:03 PM

SHEET NOTES

1. REFER TO "A/V DIAGRAM - TYPE D" FOR AUDIO VIDEO CONNECTIONS WITHIN THIS ROOM
2. A/V FLOORBOX LOCATION - TYPE 2. PROVIDE (1) UTP JACK WITH CABLING AS REQUIRED (REFER TO A/V DIAGRAM - TYPE D)
3. LECTERN WITH AUDIO VIDEO RACK (REFER TO A/V DIAGRAM - TYPE D FOR A/V EQUIPMENT LAYOUT)
4. RETRACTABLE PROJECTOR SCREEN WITH IMAGE SIZE OF 64" x 102" WITH THE BOTTOM OF THE IMAGE AT 4' 0" A.F.F.
5. REFER TO "A/V DIAGRAM - TYPE B" FOR AUDIO VIDEO CONNECTIONS
6. A/V FLOORBOX LOCATION - TYPE 1
7. CONTROL PANEL SHALL BE MOUNTED ON TEACHER PODIUM IN THIS LOCATION
8. CEILING MOUNTED ENCLOSURE (REFER TO A/V DIAGRAM - TYPE C FOR A/V EQUIPMENT LAYOUT)
9. REFER TO "A/V DIAGRAM - TYPE C" FOR AUDIO VIDEO CONNECTIONS WITHIN THIS ROOM
10. PROJECTOR THROW DISTANCE DIMENSIONS ARE FOR REFERENCE ONLY - PROJECTORS SHALL BE MOUNTED TO ACHIEVE REQUIRED IMAGE SIZE WITH MINIMAL POST-INSTALLATION ADJUSTMENT

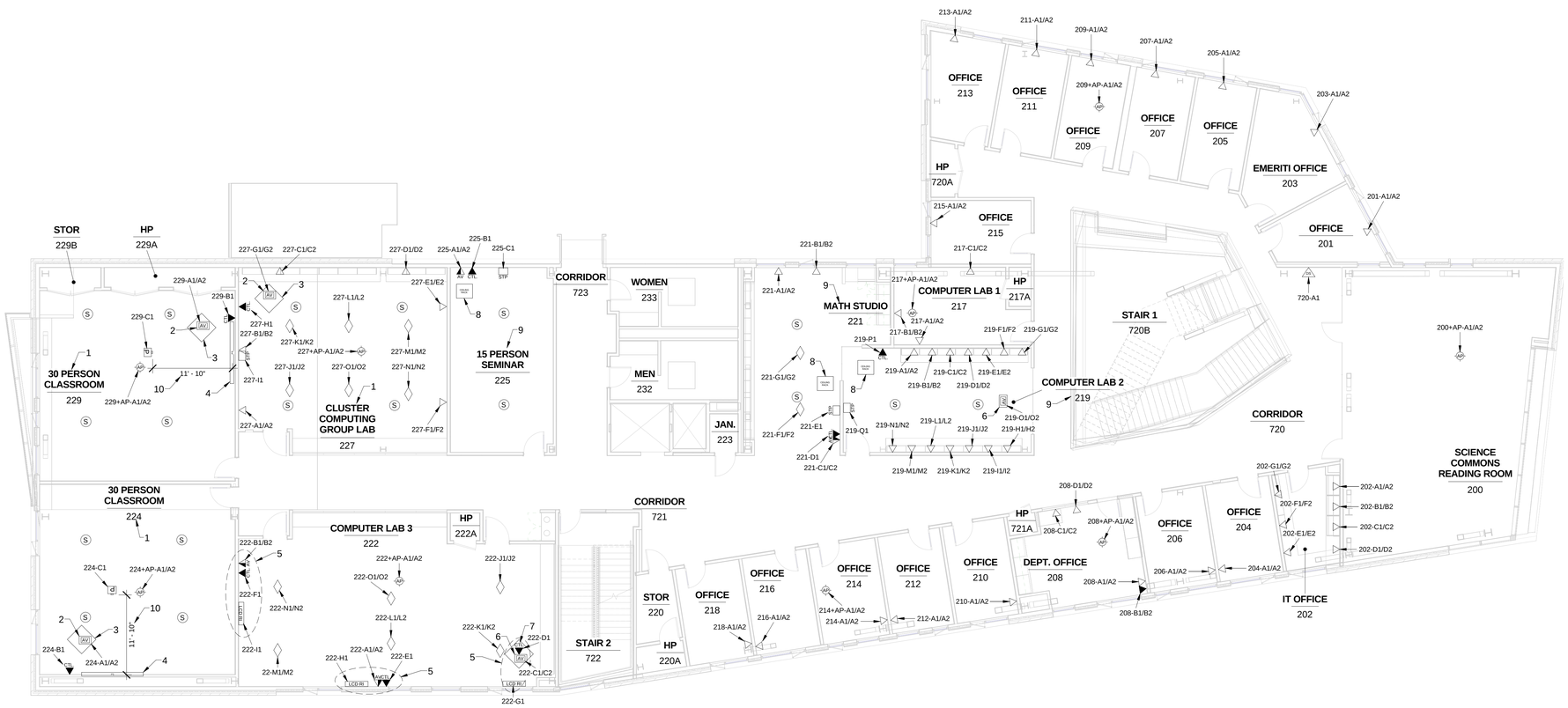

1 SECOND FLOOR TELECOM & AV PLAN
1/8" = 1'-0"

2/26/2014 1:48:13 PM

boora

Boora Architects, Inc.
720 SW Washington, Suite 800
Portland, OR 97205
T. 503.226.1575 F. 503.241.7429
www.boora.com

DESIGN 27 TECHNOLOGY + ACOUSTICS
740 E. 52ND STREET, STE. 6
INDIANAPOLIS, IN 46205
317.536.8000
WWW.DESIGN27.COM

REGISTERED COMMUNICATIONS DISTRIBUTION DESIGNER
Bicsi
MATTHEW J. CONNOLLY
REG. NO. 153914R
EXPIRES 12-31-15
RCDD
SIGNATURE

Earlham College Science Complex
Phases 2
801 National Road West
Richmond, IN 47374-4095

MARK	DATE	DESCRIPTION

Issued: February 28th, 2014
Scale: As indicated

Copyright
Boora Project Number: 12009

CONFORMED SET

SECOND FLOOR TELECOM & AV PLAN

T102

SHEET NOTES

1. REFER TO "A/V DIAGRAM - TYPE D" FOR AUDIO VIDEO CONNECTIONS WITHIN THIS ROOM
2. LECTERN WITH AUDIO VIDEO RACK (REFER TO A/V DIAGRAM - TYPE D FOR A/V EQUIPMENT LAYOUT)
3. A/V FLOORBOX LOCATION - TYPE 2. PROVIDE (1) UTP JACK WITH CABLING AS REQUIRED (REFER TO A/V DIAGRAM -TYPE D)
4. RETRACTABLE PROJECTOR SCREEN WITH IMAGE SIZE OF 64" x 102" WITH THE BOTTOM OF THE IMAGE AT 4' 0" A.F.F.
5. REFER TO "A/V DIAGRAM - TYPE E" FOR AUDIO VIDEO CONNECTIONS WITHIN THIS ROOM
6. LECTERN WITH AUDIO VIDEO RACK (REFER TO A/V DIAGRAM - TYPE E FOR A/V EQUIPMENT LAYOUT)
7. A/V FLOORBOX LOCATION - TYPE 2. PROVIDE (3) UTP JACKS AND (1) XLR JACK WITH CABLING AS REQUIRED (REFER TO A/V DIAGRAM -TYPE E)
8. REFER TO "A/V DIAGRAM - TYPE C" FOR AUDIO VIDEO CONNECTIONS WITHIN THIS ROOM
9. CEILING MOUNTED ENCLOSURE (REFER TO A/V DIAGRAM - TYPE C FOR A/V EQUIPMENT LAYOUT)
10. REFER TO "A/V DIAGRAM - TYPE B" FOR AUDIO VIDEO CONNECTIONS WITHIN THIS ROOM
11. REFER TO "A/V DIAGRAM - ROOM 303" FOR AUDIO VIDEO CONNECTIONS WITHIN THIS ROOM
12. A/V EQUIPMENT RACK (REFER TO A/V DIAGRAM - ROOM 303 FOR A/V EQUIPMENT LAYOUT)
13. A/V FLOORBOX LOCATION - TYPE 1
14. REFER TO "A/V DIAGRAM - TYPE F" FOR AUDIO VIDEO CONNECTIONS WITHIN THIS ROOM
15. A/V FLOORBOX LOCATION - TYPE 2. PROVIDE (3) UTP JACKS AND (1) XLR JACK WITH CABLING AS REQUIRED (REFER TO A/V DIAGRAM -TYPE F)
16. MOVABLE LECTERN WITH AUDIO VIDEO RACK (REFER TO A/V DIAGRAM - TYPE F FOR A/V EQUIPMENT LAYOUT)
17. A/V EQUIPMENT RACK (REFER TO A/V DIAGRAM - TYPE F FOR A/V EQUIPMENT LAYOUT)
18. PROJECTOR THROW DISTANCE DIMENSIONS ARE FOR REFERENCE ONLY - PROJECTORS SHALL BE MOUNTED TO ACHIEVE REQUIRED IMAGE SIZE WITH MINIMAL POST-INSTALLATION ADJUSTMENT

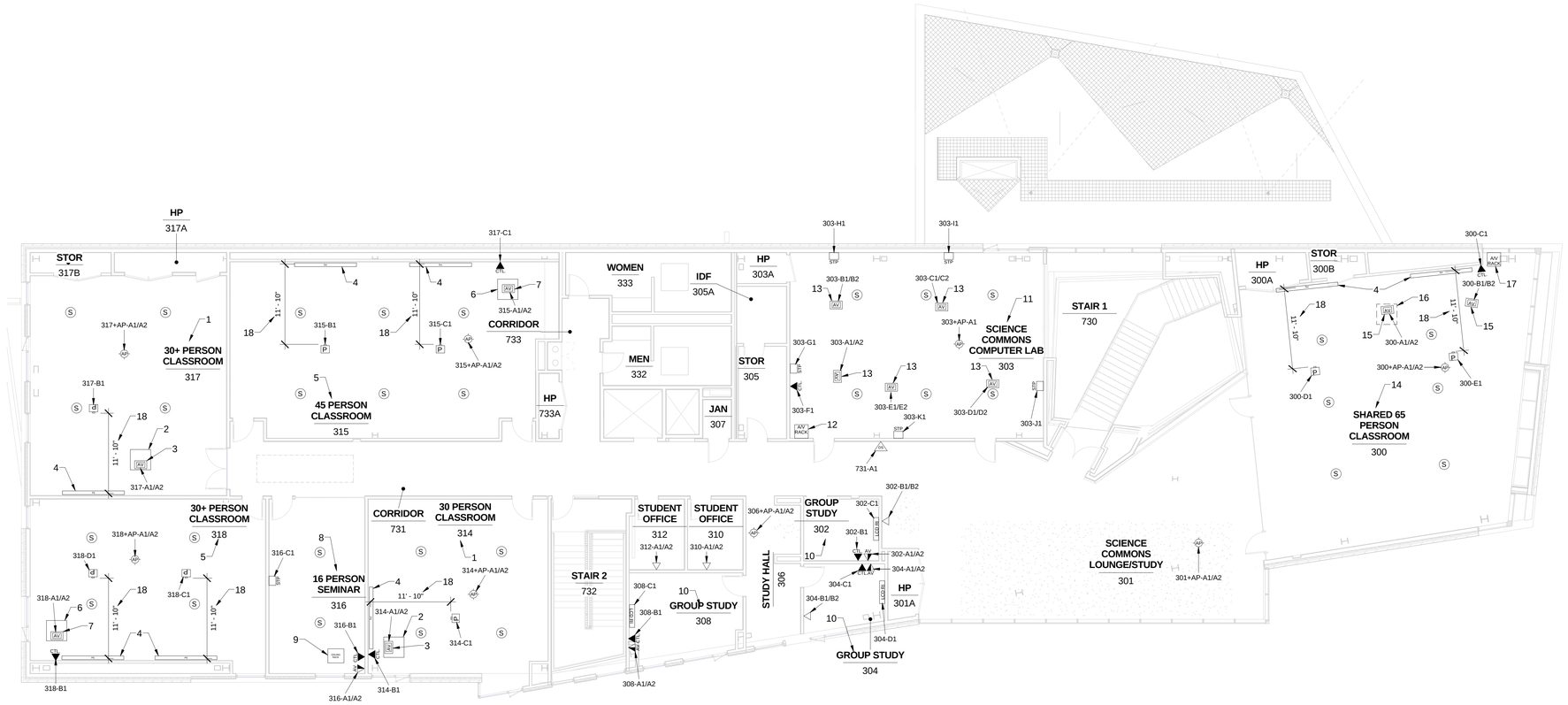

1 THIRD FLOOR TELECOM & AV PLAN
1/8" = 1'-0"

2/26/2014 1:48:27 PM

boora

Boora Architects, Inc.
720 SW Washington, Suite 800
Portland, OR 97205
T. 503.226.1575 F. 503.241.7429
www.boora.com

DESIGN 27 TECHNOLOGY + ACOUSTICS
740 E. 52ND STREET, STE. 6
INDIANAPOLIS, IN 46205
317.536.8000
WWW.DESIGN27.COM

REGISTERED COMMUNICATIONS DISTRIBUTION DESIGNER
Bicsi
MATTHEW J. CONNOLLY
REG. NO. 153914R
EXPIRES 12-31-15
RCDD
SIGNATURE

Earlham College Science Complex
Phases 2
801 National Road West
Richmond, IN 47374-4095

MARK	DATE	DESCRIPTION

Issued: February 28th, 2014
Scale: As indicated

Copyright
Boora Project Number: 12009

CONFORMED SET

THIRD FLOOR TELECOM & AV PLAN

T103

BASEMENT SECURITY DEVICES			
ROOM NUMBER	ER/TR ROOM NUMBER	LABEL	NOTES
700	700A	700+SC-A1	CEILING MOUNTED SECURITY CAMERA
700	700A	700+SC-B1	CEILING MOUNTED SECURITY CAMERA

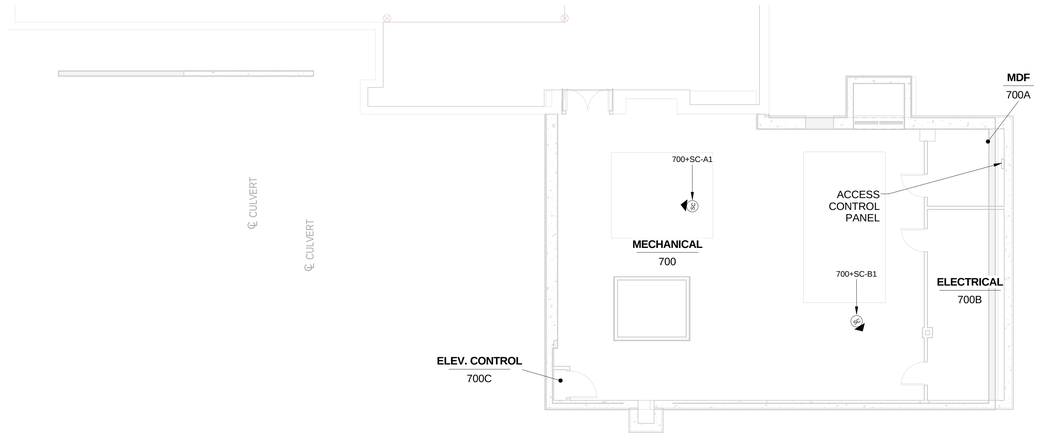

1 BASEMENT FLOOR SECURITY PLAN
1/8" = 1'-0"

2/26/2014 1:48:39 PM

boora

Boora Architects, Inc.
720 SW Washington, Suite 800
Portland, OR 97205
T. 503.226.1575 F. 503.241.7429
www.boora.com

DESIGN 27
TECHNOLOGY + ACOUSTICS
740 E. 52ND STREET, STE. 6
INDIANAPOLIS, IN 46205
317.536.8000
WWW.DESIGN27.COM

REGISTERED COMMUNICATIONS DISTRIBUTION DESIGNER
Bicsi
MATTHEW J. CONNOLLY
REG. NO. 153914R
EXPIRES 12-31-15
RCDD
SIGNATURE

Earlham College Science Complex
Phases 2

801 National Road West
Richmond, IN 47374-4095

MARK	DATE	DESCRIPTION

Issued: February 28th, 2014
Scale: 1/8" = 1'-0"

Copyright
Boora Project Number: 12009

CONFORMED SET

BASEMENT SECURITY PLAN

T200

FIRST FLOOR SECURITY DEVICES			
ROOM NUMBER	ER/TR ROOM NUMBER	LABEL	NOTES
100	700A	100+SC-A1	CEILING MOUNTED SECURITY CAMERA
100	700A	100+SC-C1	CEILING MOUNTED SECURITY CAMERA
100	700A	100+SC-B1	CEILING MOUNTED SECURITY CAMERA
100A	700A	100A-CR01	WIRED CARD READER - DOOR TYPE D2
100B	700A	100B-CR01	WIRED CARD READER - DOOR TYPE D2
103	700A	103-CR02	WIRED CARD READER - DOOR TYPE S2
103	700A	103-CR01	WIRED CARD READER - DOOR TYPE S2
104	700A	104-CR01	WIRED CARD READER - DOOR TYPE S1
104	700A	104-CR02	WIRED CARD READER - DOOR TYPE S1
106	700A	106-CR01	WIRED CARD READER - DOOR TYPE S1
107	700A	107-CR01	WIRED CARD READER - DOOR TYPE S1
108	700A	108-CR01	WIRED CARD READER - DOOR TYPE S1
109	700A	109-CR01	WIRED CARD READER - DOOR TYPE S1
110	700A	110-CR01	WIRED CARD READER - DOOR TYPE S1
111	700A	111-CR01	WIRED CARD READER - DOOR TYPE D1
112	700A	112-CR01	WIRED CARD READER - DOOR TYPE S1
710	700A	710+SC-A1	CEILING MOUNTED SECURITY CAMERA
710	700A	710+SC-B1	CEILING MOUNTED SECURITY CAMERA
711	700A	711+SC-A1	CEILING MOUNTED SECURITY CAMERA
712	700A	712-CR01	WIRED CARD READER - DOOR TYPE D1
712	700A	712+SC-A1	CEILING MOUNTED SECURITY CAMERA

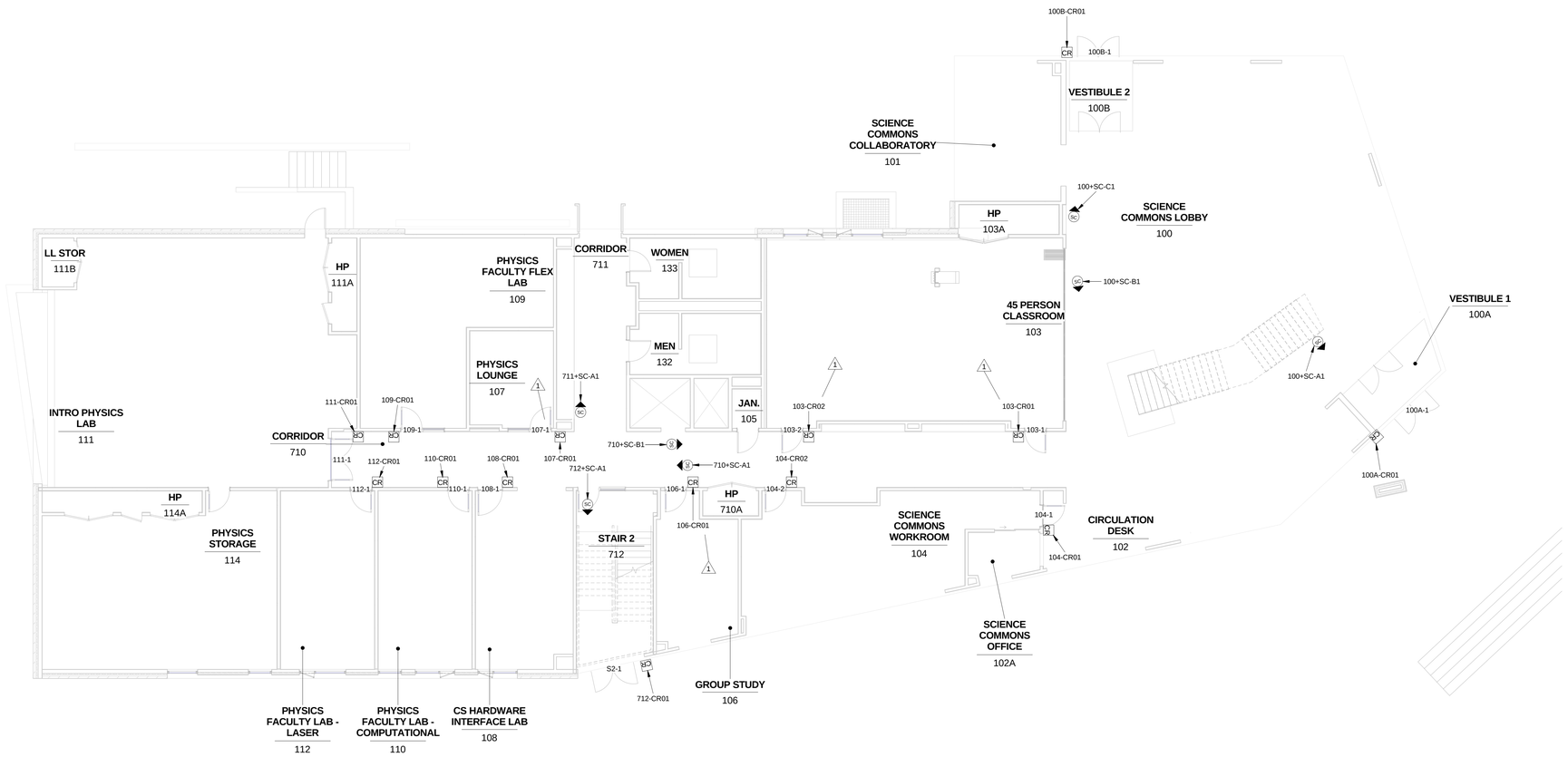

1 FIRST FLOOR SECURITY PLAN
1/8" = 1'-0"

2/26/2014 1:48:49 PM

boora

Boora Architects, Inc.
720 SW Washington, Suite 800
Portland, OR 97205
T. 503.226.1575 F. 503.241.7429
www.boora.com

DESIGN 27
TECHNOLOGY + ACOUSTICS
740 E. 52ND STREET, STE. 6
INDIANAPOLIS, IN 46205
317.536.8000
WWW.DESIGN27.COM

REGISTERED COMMUNICATIONS DISTRIBUTION DESIGNER
BICSI
MATTHEW J. CONNOLLY
REG. NO. 153914R
EXPIRES 12-31-15
RCDD
SIGNATURE

Earlham College Science Complex
Phases 2
801 National Road West
Richmond, IN 47374-4095

MARK	DATE	DESCRIPTION
1	01-15-14	Addendum 2

Issued: February 28th, 2014
Scale: 1/8" = 1'-0"

Copyright
Boora Project Number: 12009

CONFORMED SET

FIRST FLOOR SECURITY FLOOR PLAN

T201

SECOND FLOOR SECURITY DEVICES			
ROOM NUMBER	ER/TR ROOM NUMBER	LABEL	NOTES
217	305A	217-CR01	WIRED CARD READER - DOOR TYPE S1
219	305A	219-CR01	WIRED CARD READER - DOOR TYPE S1
222	305A	222-CR02	WIRED CARD READER - DOOR TYPE S2
222	305A	222-CR01	WIRED CARD READER - DOOR TYPE S2
224	305A	224-CR01	WIRED CARD READER - DOOR TYPE S1
225	305A	225-CR01	WIRED CARD READER - DOOR TYPE S1
227	305A	227-CR01	WIRED CARD READER - DOOR TYPE S1
229	305A	229-CR01	WIRED CARD READER - DOOR TYPE S1
720	305A	720+SC-A1	CEILING MOUNTED SECURITY CAMERA
721	305A	721+SC-B1	CEILING MOUNTED SECURITY CAMERA
721	305A	721+SC-A1	CEILING MOUNTED SECURITY CAMERA
722	305A	722+SC-A1	CEILING MOUNTED SECURITY CAMERA
723	305A	723+SC-A1	CEILING MOUNTED SECURITY CAMERA

1 SECOND FLOOR SECURITY PLAN
1/8" = 1'-0"

boora

Boora Architects, Inc.
720 SW Washington, Suite 800
Portland, OR 97205
T. 503.226.1575 F. 503.241.7429
www.boora.com

DESIGN 27 TECHNOLOGY + ACOUSTICS
740 E. 52ND STREET, STE. 6
INDIANAPOLIS, IN 46205
317.536.8000
WWW.DESIGN27.COM

REGISTERED COMMUNICATIONS DISTRIBUTION DESIGNER
Bicsi
MATTHEW J. CONNOLLY
REG. NO. 153914R
EXPIRES 12-31-15
RCDD
SIGNATURE

Earlham College Science Complex
Phases 2
801 National Road West
Richmond, IN 47374-4095

MARK	DATE	DESCRIPTION
1	01-15-14	Addendum 2

Issued: February 28th, 2014
Scale: 1/8" = 1'-0"

Copyright
Boora Project Number: 12009

CONFORMED SET

SECOND FLOOR
SECURITY FLOOR PLAN

T202

2/26/2014 1:49:00 PM

THIRD FLOOR SECURITY DEVICES			
ROOM NUMBER	ER/TR ROOM NUMBER	LABEL	NOTES
300	305A	300-CR02	WIRED CARD READER - DOOR TYPE S2
300	305A	300-CR01	WIRED CARD READER - DOOR TYPE S2
303	305A	303-CR02	WIRED CARD READER - DOOR TYPE S2
303	305A	303-CR01	WIRED CARD READER - DOOR TYPE S2
308	305A	308-CR01	WIRED CARD READER - DOOR TYPE S1
314	305A	314-CR01	WIRED CARD READER - DOOR TYPE S1
315	305A	315-CR01	WIRED CARD READER - DOOR TYPE S1
315	305A	315-CR02	WIRED CARD READER - DOOR TYPE S1
316	305A	316-CR01	WIRED CARD READER - DOOR TYPE S1
317	305A	317-CR01	WIRED CARD READER - DOOR TYPE D3
318	305A	318-CR01	WIRED CARD READER - DOOR TYPE S1
731	700A	731+SC-A1	CEILING MOUNTED SECURITY CAMERA
731	305A	731+SC-C1	CEILING MOUNTED SECURITY CAMERA
731	305A	731+SC-B1	CEILING MOUNTED SECURITY CAMERA
732	700A	732+SC-A1	CEILING MOUNTED SECURITY CAMERA
733	305A	733+SC-A1	CEILING MOUNTED SECURITY CAMERA

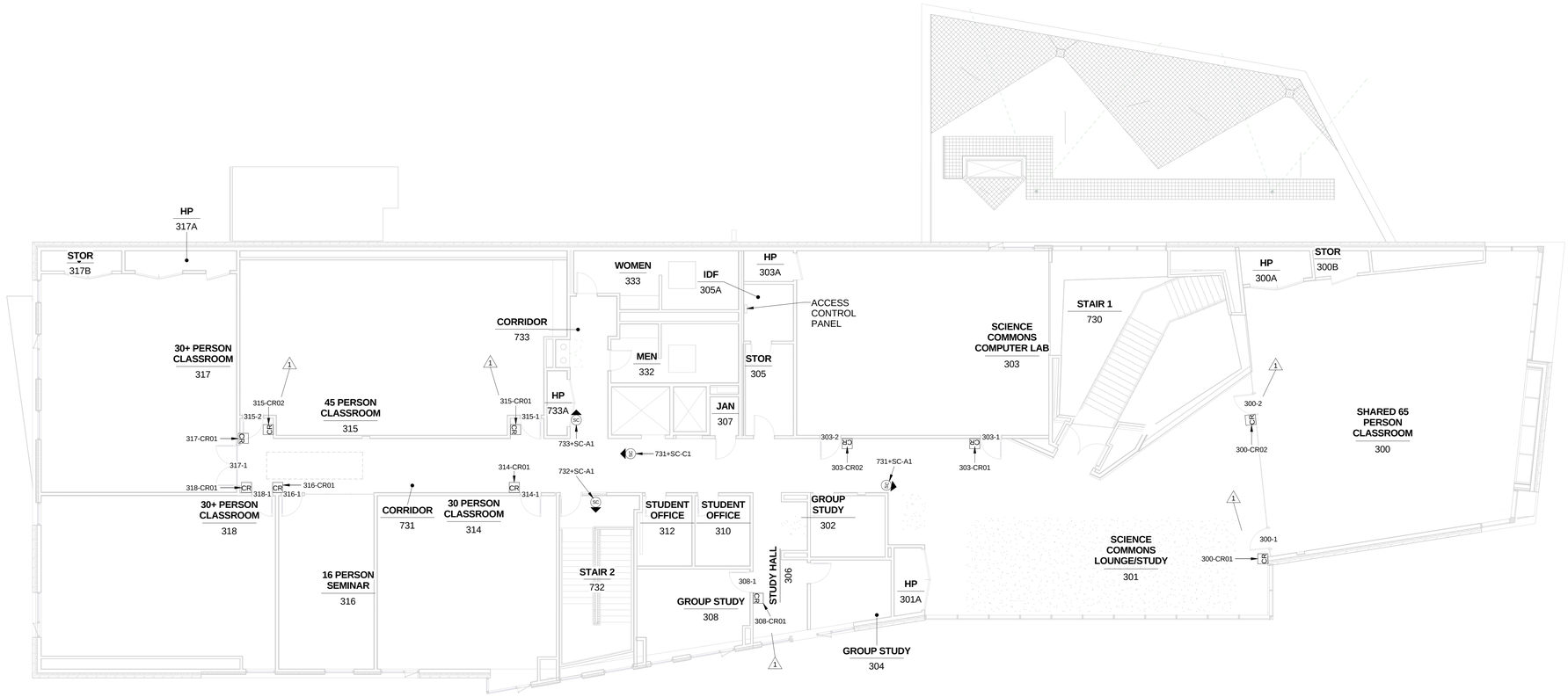

1 THIRD FLOOR SECURITY PLAN
1/8" = 1'-0"

2/26/2014 1:49:12 PM

boora

Boora Architects, Inc.
720 SW Washington, Suite 800
Portland, OR 97205
T. 503.226.1575 F. 503.241.7429
www.boora.com

DESIGN 27 TECHNOLOGY + ACOUSTICS
740 E. 52ND STREET, STE. 6
INDIANAPOLIS, IN 46205
317.536.8000
WWW.DESIGN27.COM

REGISTERED COMMUNICATIONS DISTRIBUTION DESIGNER
BICSI
MATTHEW J. CONNOLLY
REG. NO. 153914R
EXPIRES 12-31-15
RCDD
SIGNATURE

Earlham College Science Complex Phases 2
801 National Road West
Richmond, IN 47374-4095

MARK	DATE	DESCRIPTION
1	01-15-14	Addendum 2

Issued: February 28th, 2014
Scale: 1/8" = 1'-0"

Copyright
Boora Project Number: 12009

CONFORMED SET

THIRD FLOOR SECURITY FLOOR PLAN

T203

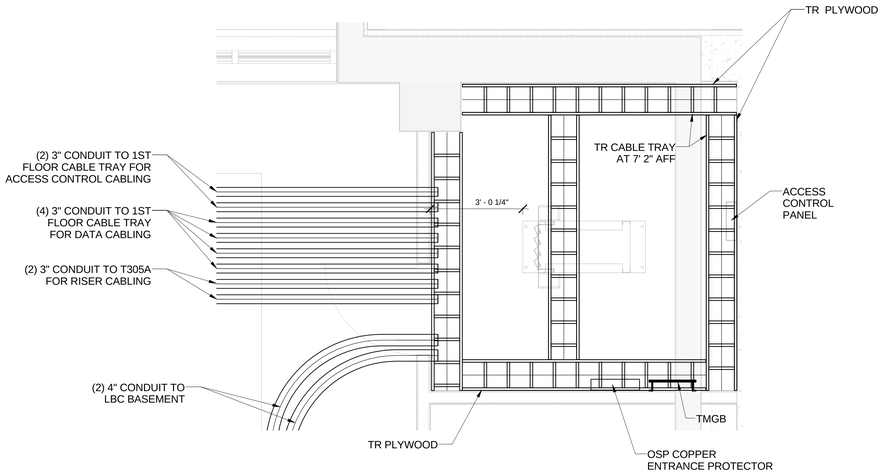

1 MDF 700A LAYOUT
1/2" = 1'-0"

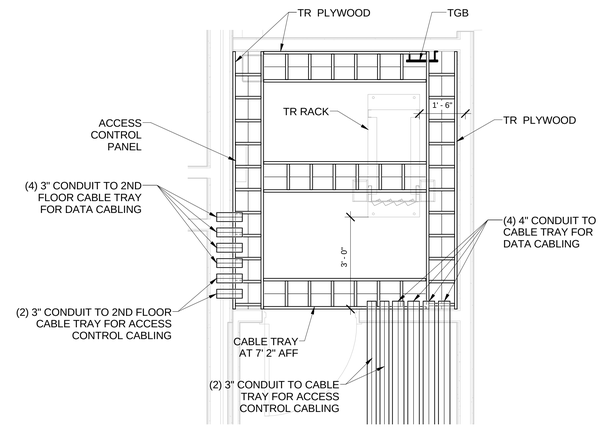

2 IDF 305A LAYOUT
1/2" = 1'-0"

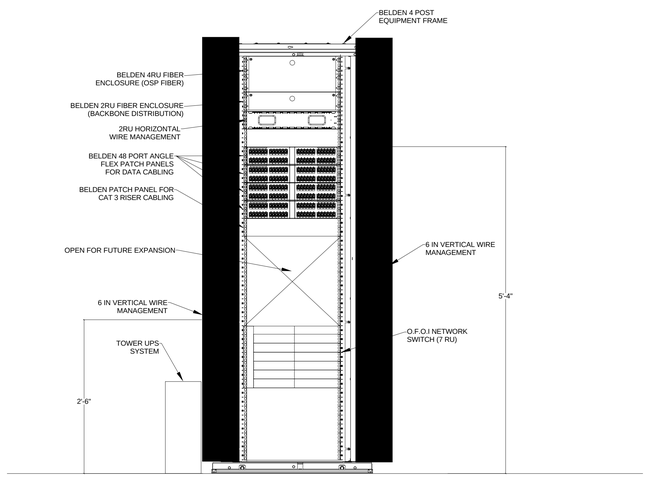

3 ER RACK ELEVATION
N.T.S.

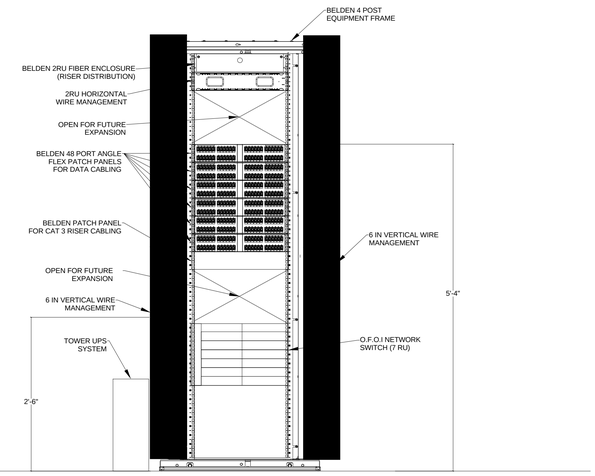

4 TR RACK ELEVATION
N.T.S.

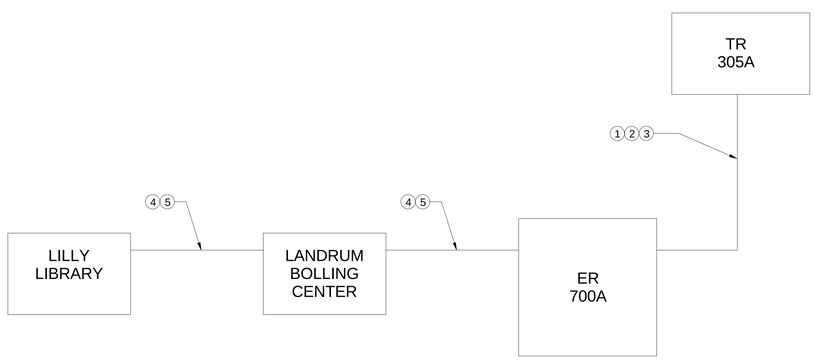

5 RISER DIAGRAM
N.T.S.

RISER LEGEND: (THIS DETAIL)

1. 12 STRANDS 50 MICRON OM4 MULTIMODE RISER FIBER
2. 12 STRANDS OS2 SINGLE MODE RISER FIBER
3. 50 PAIR CAT 3 RISER CABLE
4. 24 STRANDS OS2 SINGLE MODE BACKBONE FIBER
5. 100 PAIR CAT 3 BACKBONE COPPER

RISER NOTES (THIS DETAIL)

A. ALL CONNECTIONS, CONNECTION HARDWARE AND RACK ARRANGEMENT SHALL BE AS DIRECTED BY THE CONTRACT DRAWINGS APPROVED BY THE OWNER'S REPRESENTATIVE.
B. CONTRACTOR SHALL PROVIDE, INSTALL AND TERMINATE NEW FIBER AND CATEGORY 3 COPPER BACKBONE CABLES, ROUTED THROUGH THE RISER CONDUIT AND SUPPORTS, FROM THE ER TO THE TR AS FOLLOWS:
   - ONE 12 STRAND MULTIMODE 50 MICRON OM4 FIBER CABLE
   - ONE 12 STRAND SINGLEMODE OS2 FIBER CABLE
   - ONE 50 PAIR CAT 3 BACKBONE CABLE
C. CONTRACTOR SHALL TERMINATE ALL FIBER CABLES IN THE TR RACKS. CONTRACTOR SHALL TERMINATE ALL CAT 3 COPPER RISER CABLES ON PATCH PANELS WITHIN THE TR RACKS.
D. BACKBONE CABLING ENTERING THE ER AND TR SHALL CONTINUE THROUGH EACH ROOM TO THEIR SPECIFIED TERMINATION POINT WITH AN ADEQUATE SERVICE LOOP.

boora

Boora Architects, Inc.
720 SW Washington, Suite 800
Portland, OR 97205
T. 503.226.1575 F. 503.241.7429
www.boora.com

DESIGN 27 TECHNOLOGY + ACOUSTICS
740 E. 52ND STREET, STE. 6
INDIANAPOLIS, IN 46205
317.536.8000
WWW.DESIGN27.COM

REGISTERED COMMUNICATIONS DISTRIBUTION DESIGNER
Bicsi
MATTHEW J. CONNOLLY
REG. NO. 153914R
EXPIRES 12-31-15
RCDD
SIGNATURE

Earlham College Science Complex
Phases 2
801 National Road West
Richmond, IN 47374-4095

MARK	DATE	DESCRIPTION

Issued: February 28th, 2014
Scale: As indicated

Copyright
Boora Project Number: 12009

CONFORMED SET

TELECOMMUNICATION ROOM LAYOUTS

T301

2/26/2014 1:49:39 PM

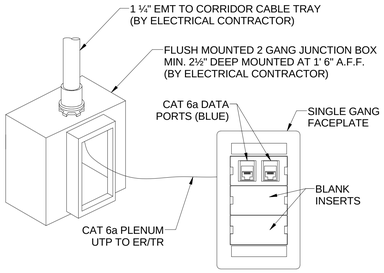

NOTE: CONTRACTOR SHALL PROVIDE AND INSTALL ALL ACCESSORIES REQUIRED FOR A COMPLETE AND FUNCTIONAL SYSTEM

1 STANDARD DATA LOCATION
N.T.S.

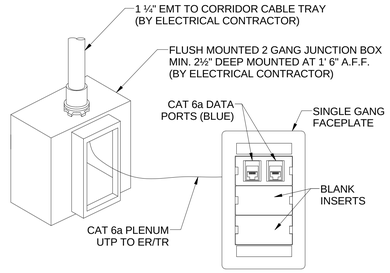

NOTE: CONTRACTOR SHALL PROVIDE AND INSTALL ALL ACCESSORIES REQUIRED FOR A COMPLETE AND FUNCTIONAL SYSTEM

2 VOICE ONLY LOCATION
N.T.S.

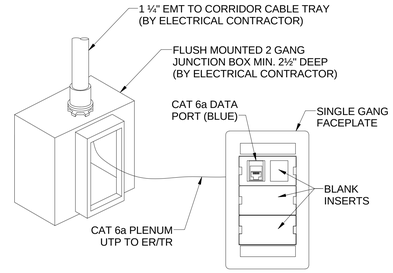

NOTE: CONTRACTOR SHALL PROVIDE AND INSTALL ALL ACCESSORIES REQUIRED FOR A COMPLETE AND FUNCTIONAL SYSTEM

3 DIGITAL SIGN LOCATION
N.T.S.

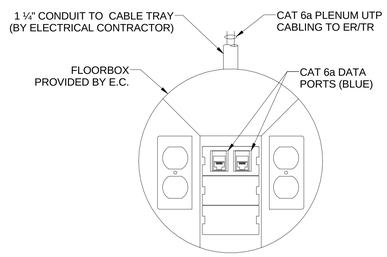

NOTE: CONTRACTOR SHALL PROVIDE AND INSTALL ALL ACCESSORIES REQUIRED FOR A COMPLETE AND FUNCTIONAL SYSTEM

4 FLOOR BOX LOCATION - TYPE 1
N.T.S.

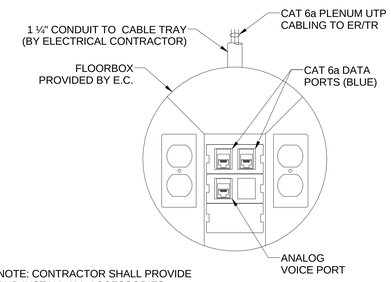

NOTE: CONTRACTOR SHALL PROVIDE AND INSTALL ALL ACCESSORIES REQUIRED FOR A COMPLETE AND FUNCTIONAL SYSTEM

5 FLOOR BOX LOCATION - TYPE 2
N.T.S.

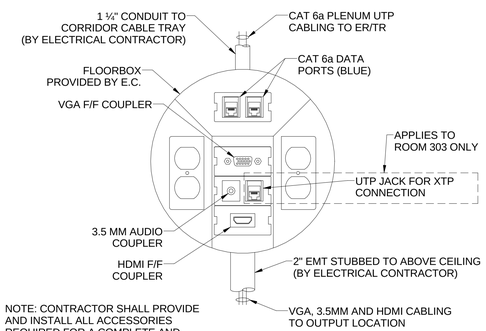

NOTE: CONTRACTOR SHALL PROVIDE AND INSTALL ALL ACCESSORIES REQUIRED FOR A COMPLETE AND FUNCTIONAL SYSTEM

6 A/V FLOOR BOX LOCATION - TYPE 1
N.T.S.

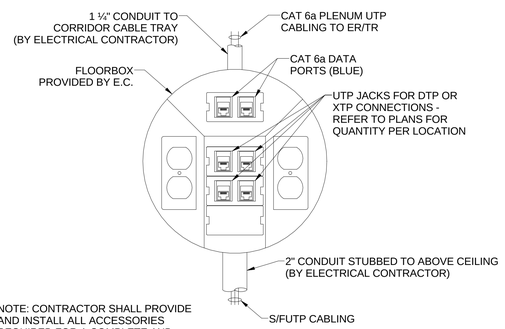

NOTE: CONTRACTOR SHALL PROVIDE AND INSTALL ALL ACCESSORIES REQUIRED FOR A COMPLETE AND FUNCTIONAL SYSTEM

7 A/V FLOOR BOX LOCATION - TYPE 2
N.T.S.

2/26/2014 1:49:53 PM

boora

Boora Architects, Inc.
720 SW Washington, Suite 800
Portland, OR 97205
T. 503.226.1575 F. 503.241.7429
www.boora.com

DESIGN 27 TECHNOLOGY + ACOUSTICS
740 E. 52ND STREET, STE. 6
INDIANAPOLIS, IN 46205
317.536.8000
WWW.DESIGN27.COM

REGISTERED COMMUNICATIONS DISTRIBUTION DESIGNER
Bicsi
MATTHEW J. CONNOLLY
REG. NO. 153914R
EXPIRES 12-31-15
RCDD
SIGNATURE

Earlham College Science Complex
Phases 2
801 National Road West
Richmond, IN 47374-4095

MARK	DATE	DESCRIPTION

Issued: February 28th, 2014
Scale: As indicated

Copyright
Boora Project Number: 12009

CONFORMED SET

TECHNOLOGY DETAILS

T501

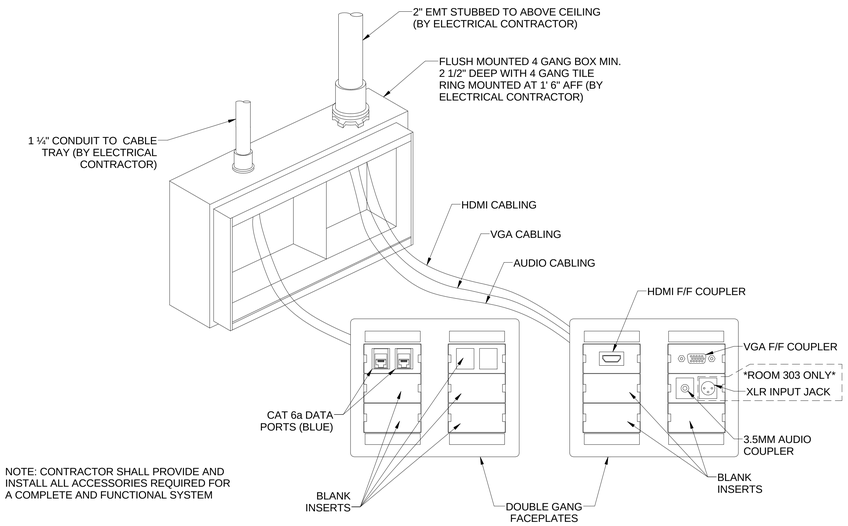

NOTE: CONTRACTOR SHALL PROVIDE AND INSTALL ALL ACCESSORIES REQUIRED FOR A COMPLETE AND FUNCTIONAL SYSTEM

1 A/V WALL INPUT LOCATION
N.T.S.

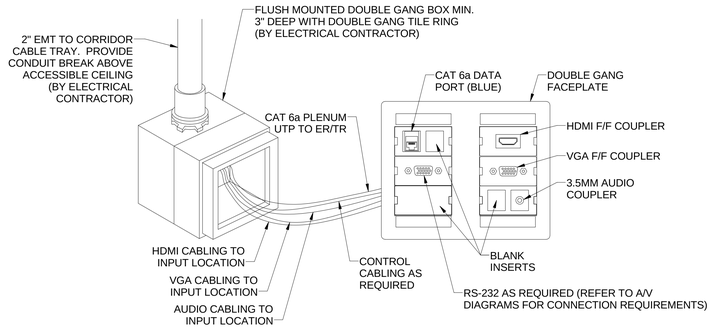

NOTE: CONTRACTOR SHALL PROVIDE AND INSTALL ALL ACCESSORIES REQUIRED FOR A COMPLETE AND FUNCTIONAL SYSTEM

2 LCD ROUGH-IN LOCATION
N.T.S.

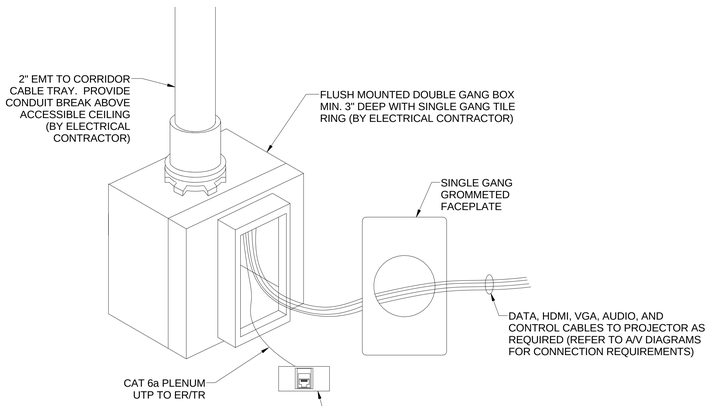

NOTE: CONTRACTOR SHALL PROVIDE AND INSTALL ALL ACCESSORIES REQUIRED FOR A COMPLETE AND FUNCTIONAL SYSTEM

3 SHORT THROW PROJECTOR LOCATION
N.T.S.

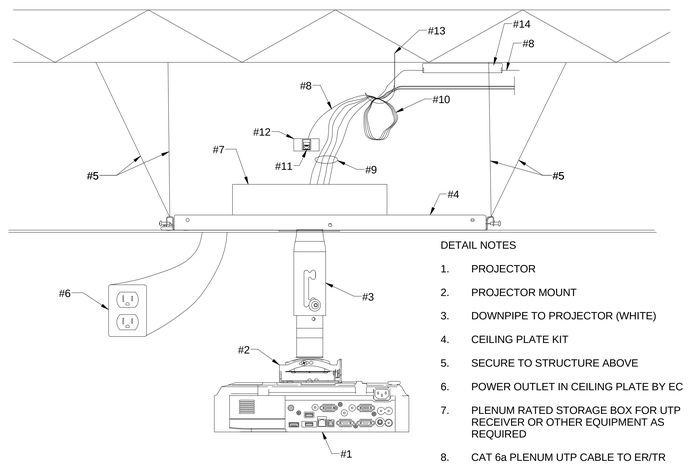

NOTE: CONTRACTOR SHALL PROVIDE AND INSTALL ALL ACCESSORIES REQUIRED FOR A COMPLETE AND FUNCTIONAL SYSTEM AND SHALL INSTALL ALL EQUIPMENT TO MANUFACTURER REQUIREMENTS

DETAIL NOTES

1. PROJECTOR
2. PROJECTOR MOUNT
3. DOWNPIPE TO PROJECTOR (WHITE)
4. CEILING PLATE KIT
5. SECURE TO STRUCTURE ABOVE
6. POWER OUTLET IN CEILING PLATE BY EC
7. PLENUM RATED STORAGE BOX FOR UTP RECEIVER OR OTHER EQUIPMENT AS REQUIRED
8. CAT 6a PLENUM UTP CABLE TO ER/TR
9. HDMI, VGA, AUDIO, S/FUTP AND CONTROL CABLES TO PROJECTOR OR UTP RECEIVER AS REQUIRED (REFER TO A/V DIAGRAMS FOR CONNECTION REQUIREMENTS)
10. 5' OF SLACK LEFT AT THE PROJECTOR
11. CAT 6a DATA PORT (BLUE)
12. 1 PORT SURFACE MOUNT BOX (WHITE)
13. J-HOOK SECURED TO STRUCTURE ABOVE
14. 1¼" EMT TO CORRIDOR CABLE TRAY (BY ELECTRICAL CONTRACTOR)

4 CEILING PROJECTOR LOCATION
N.T.S.

boora

Boora Architects, Inc.
720 SW Washington, Suite 800
Portland, OR 97205
T. 503.226.1575 F. 503.241.7429
www.boora.com

DESIGN 27 TECHNOLOGY + ACOUSTICS
740 E. 52ND STREET, STE. 6
INDIANAPOLIS, IN 46205
317.536.8000
WWW.DESIGN27.COM

REGISTERED COMMUNICATIONS DISTRIBUTION DESIGNER
Bicsi
MATTHEW J. CONNOLLY
REG. NO. 153914R
EXPIRES 12-31-15
RCDD
SIGNATURE

Earlham College Science Complex
Phases 2
801 National Road West
Richmond, IN 47374-4095

MARK	DATE	DESCRIPTION

Issued: February 28th, 2014
Scale: As indicated

Copyright
Boora Project Number: 12009

CONFORMED SET

TECHNOLOGY DETAILS

T502

2/26/2014 1:50:01 PM

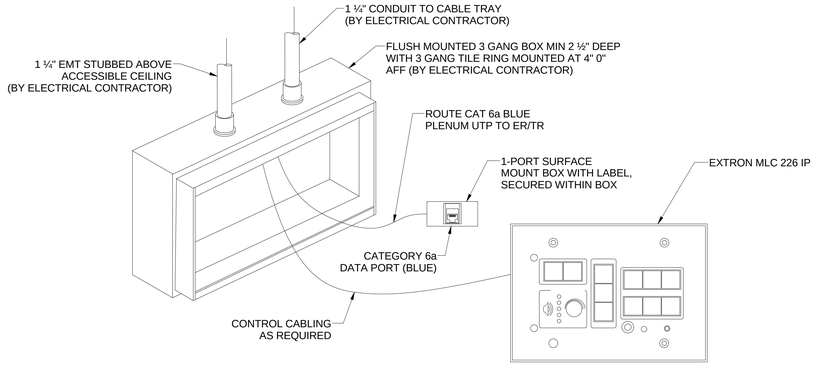

NOTE: CONTRACTOR SHALL PROVIDE AND
INSTALL ALL ACCESSORIES REQUIRED FOR
A COMPLETE AND FUNCTIONAL SYSTEM

1 A/V STANDARD CONTROL LOCATION
N.T.S.

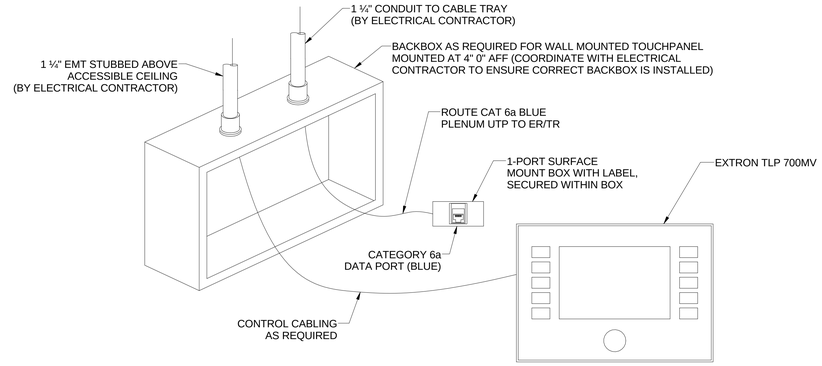

NOTE: CONTRACTOR SHALL PROVIDE AND
INSTALL ALL ACCESSORIES REQUIRED FOR
A COMPLETE AND FUNCTIONAL SYSTEM

2 A/V TOUCHPANEL CONTROL LOCATION
N.T.S.

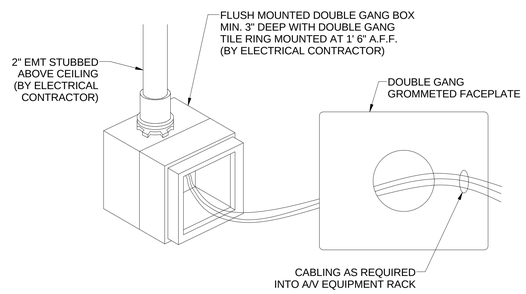

3 A/V RACK LOCATION
N.T.S.

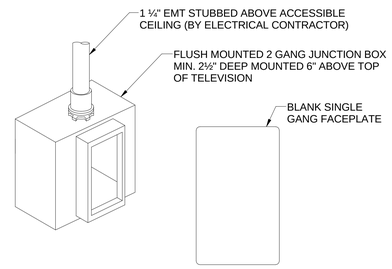

4 VIDEO CONFERENCE CAMERA ROUGH-IN LOCATION
N.T.S.

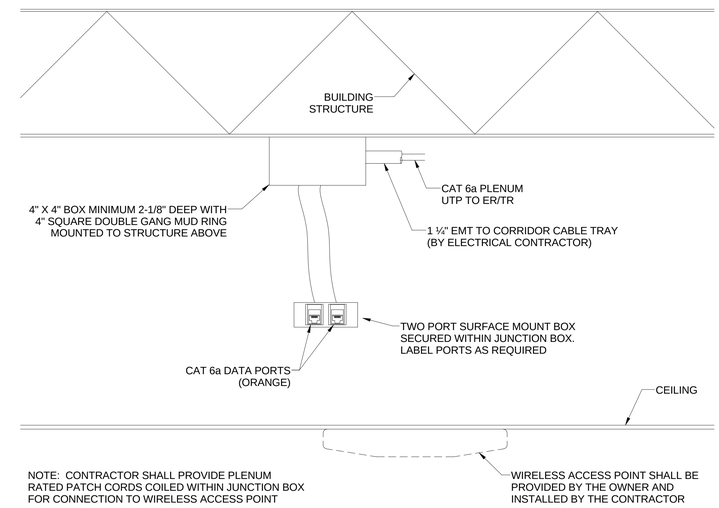

NOTE: CONTRACTOR SHALL PROVIDE PLENUM
RATED PATCH CORDS COILED WITHIN JUNCTION BOX
FOR CONNECTION TO WIRELESS ACCESS POINT

5 WIRELESS ACCESS POINT LOCATION
N.T.S.

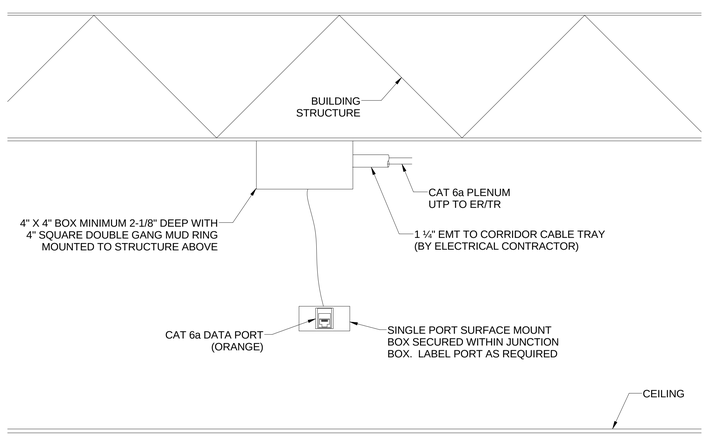

NOTE: CONTRACTOR SHALL PROVIDE PLENUM
RATED PATCH CORD TO OWNER FOR FUTURE
CAMERA CONNECTION

*SECURITY CAMERA TO BE
PROVIDED AND INSTALLED BY
OWNER AT A FUTURE DATE

6 CEILING SECURITY CAMERA LOCATION
N.T.S.

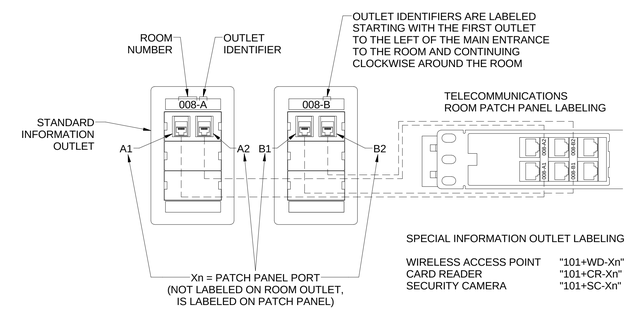

7 TYPICAL LABELING
N.T.S.

2/26/2014 1:50:08 PM

boora

Boora Architects, Inc.
720 SW Washington, Suite 800
Portland, OR 97205
T. 503.226.1575 F. 503.241.7429
www.boora.com

DESIGN 27
TECHNOLOGY
+ ACOUSTICS
740 E. 52ND STREET, STE. 6
INDIANAPOLIS, IN 46205
317.536.8000
WWW.DESIGN27.COM

REGISTERED COMMUNICATIONS DISTRIBUTION DESIGNER
Bicsi
MATTHEW J. CONNOLLY
REG. NO. 153914R
EXPIRES 12-31-15
RCDD
SIGNATURE

Earlham College Science Complex
Phases 2
801 National Road West
Richmond, IN 47374-4095

MARK	DATE	DESCRIPTION

Issued: February 28th, 2014
Scale: As indicated

Copyright
Boora Project Number: 12009

CONFORMED SET

TECHNOLOGY DETAILS

T503

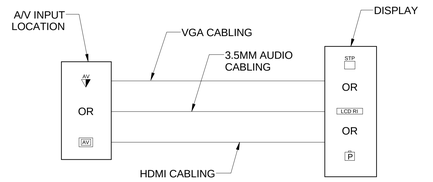

1 A/V DIAGRAM - TYPE A
1 1/2" = 1'-0"

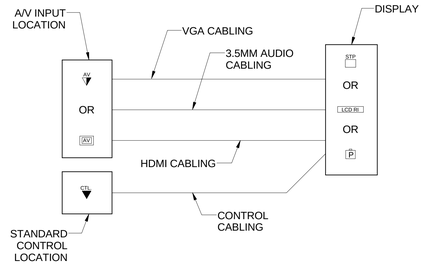

2 A/V DIAGRAM - TYPE B
1 1/2" = 1'-0"

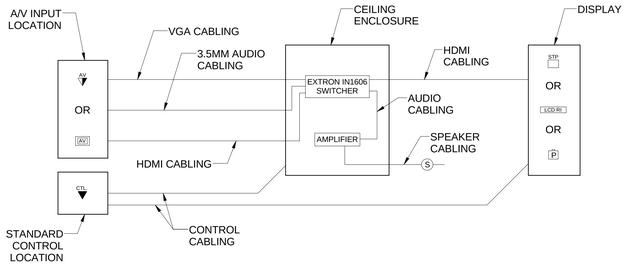

3 A/V DIAGRAM - TYPE C
1 1/2" = 1'-0"

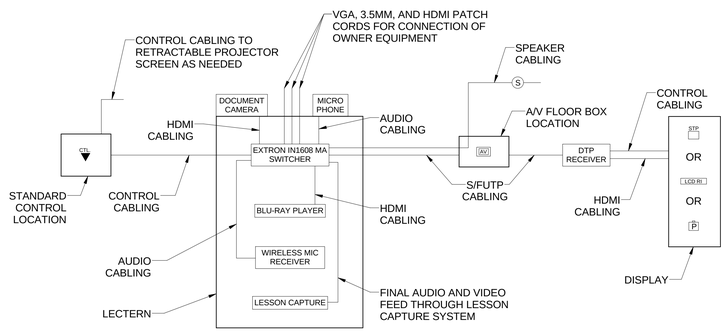

4 A/V DIAGRAM - TYPE D
1 1/2" = 1'-0"

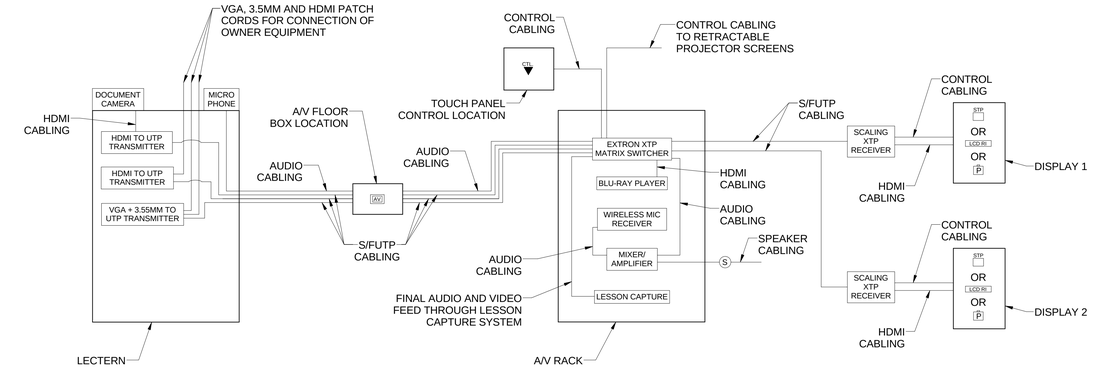

5 A/V DIAGRAM - TYPE E
1 1/2" = 1'-0"

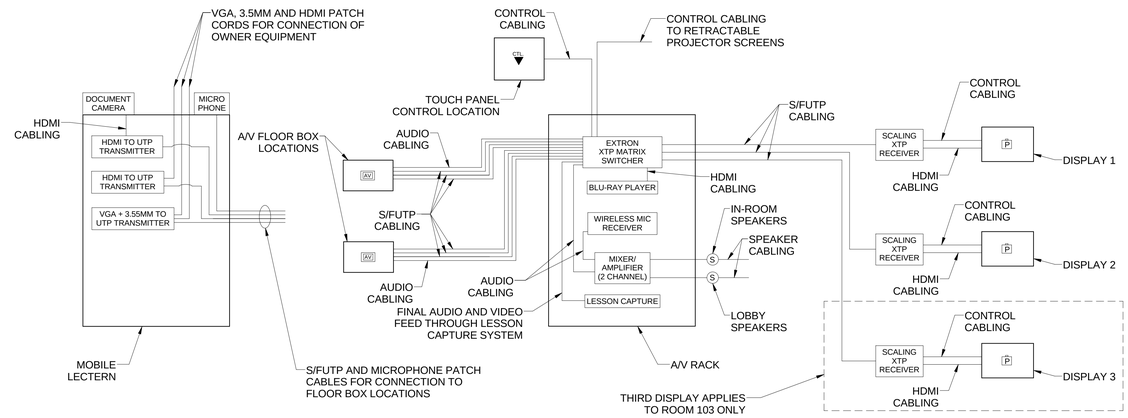

6 A/V DIAGRAM - TYPE F
1 1/2" = 1'-0"

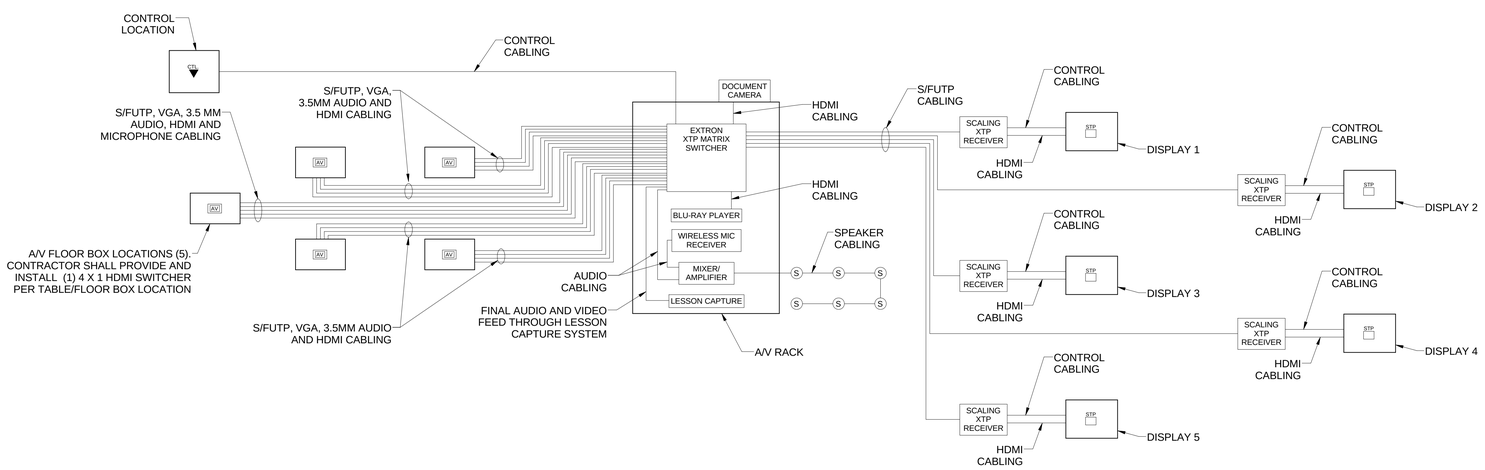

7 A/V DIAGRAM - ROOM 303
1 1/2" = 1'-0"

boora

Boora Architects, Inc.
720 SW Washington, Suite 800
Portland, OR 97205
T. 503.226.1575 F. 503.241.7429
www.boora.com

DESIGN 27 TECHNOLOGY + ACOUSTICS
740 E. 52ND STREET, STE. 6
INDIANAPOLIS, IN 46205
317.536.8000
WWW.DESIGN27.COM

REGISTERED COMMUNICATIONS DISTRIBUTION DESIGNER
Bicsi
MATTHEW J. CONNOLLY
REG. NO. 153914R
EXPIRES 12-31-15
RCDD
SIGNATURE

Earlham College Science Complex
Phases 2
801 National Road West
Richmond, IN 47374-4095

MARK	DATE	DESCRIPTION

Issued: February 28th, 2014
Scale: 1 1/2" = 1'-0"

Copyright
Boora Project Number: 12009

CONFORMED SET

A/V ROOM DIAGRAMS

T504

2/26/2014 1:50:16 PM

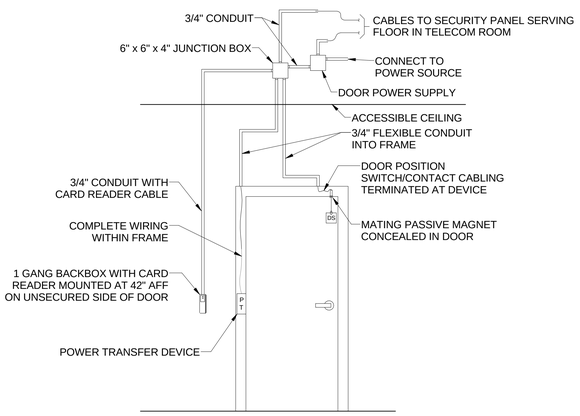

1 DOOR TYPE S1
N.T.S.

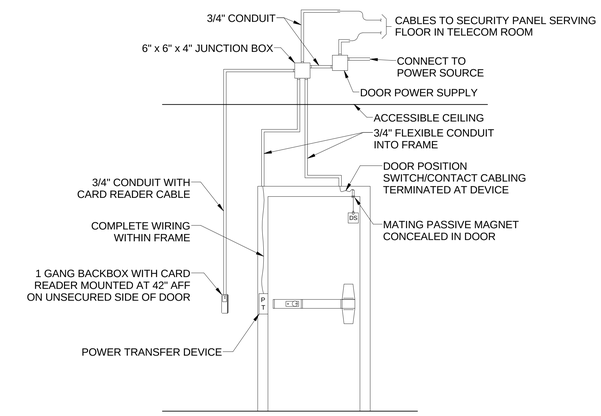

2 DOOR TYPE S2
N.T.S.

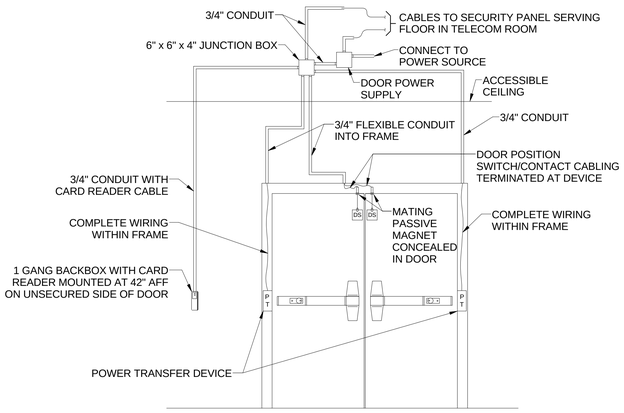

3 DOOR TYPE D1
N.T.S.

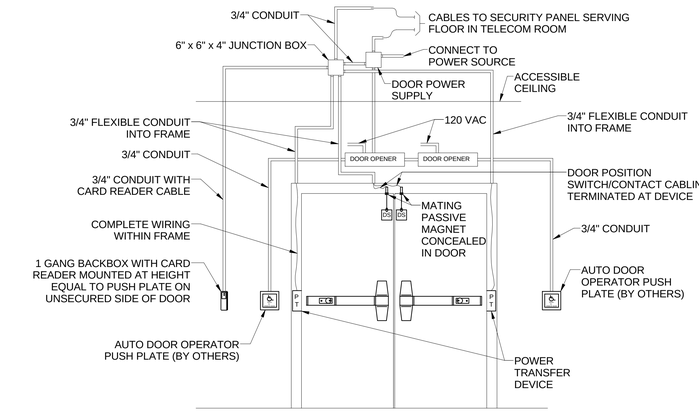

4 DOOR TYPE D2
N.T.S.

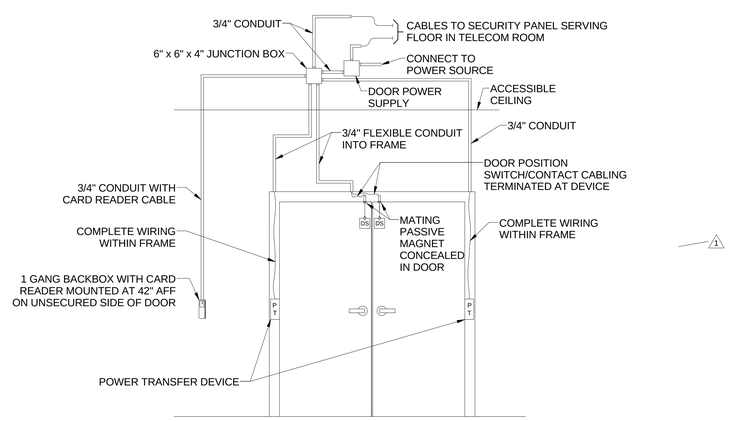

5 DOOR TYPE D3
N.T.S.

2/26/2014 1:50:23 PM

boora

Boora Architects, Inc.
720 SW Washington, Suite 800
Portland, OR 97205
T. 503.226.1575 F. 503.241.7429
www.boora.com

DESIGN 27 TECHNOLOGY + ACOUSTICS
740 E. 52ND STREET, STE. 6
INDIANAPOLIS, IN 46205
317.536.8000
WWW.DESIGN27.COM

REGISTERED COMMUNICATIONS DISTRIBUTION DESIGNER
Bicsi
MATTHEW J. CONNOLLY
REG. NO. 153914R
EXPIRES 12-31-15
RCDD
SIGNATURE

Earlham College Science Complex Phases 2
801 National Road West
Richmond, IN 47374-4095

MARK	DATE	DESCRIPTION
1	01-15-14	Addendum 2

Issued: February 28th, 2014
Scale: 6" = 1'-0"

Copyright
Boora Project Number: 12009

CONFORMED SET

ACCESS CONTROL
DOOR TYPE DETAILS

T505

BASEMENT FLOOR TELECOMMUNICATIONS SCHEDULE

ROOM NUMBER	ER/TR ROOM NUMBER	LABEL	DATA PORTS	ANALOG VOICE PORTS	NOTES
700	700A	700+AP-A1/A2	2		WIRELESS ACCESS POINT
700	700A	700-A1/A2	0		VOICE ONLY LOCATION
700	700A	700-B1/B2	0		VOICE ONLY LOCATION
700	700A	700-C1/C2	0		VOICE ONLY LOCATION
700B	700A	700B-A1/A2	2		STANDARD DATA LOCATION
Grand total			4	0	

FIRST FLOOR TELECOMMUNICATIONS SCHEDULE

ROOM NUMBER	ER/TR ROOM NUMBER	LABEL	DATA PORTS	ANALOG VOICE PORTS	NOTES
100	700A	100+AP-A1/A2	2		WIRELESS ACCESS POINT
100	700A	100+AP-B1/B2	2		WIRELESS ACCESS POINT
100	700A	100-A1	1		DIGITAL SIGNAGE LOCATION
100	700A	100-B1	1		DIGITAL SIGNAGE LOCATION
101	700A	101+AP-A1/A2	2		WIRELESS ACCESS POINT
101	700A	101-A1/A2	2		STANDARD DATA LOCATION
101	700A	101-B1/B2	2		STANDARD DATA LOCATION
101	700A	101-C1/C2	2		STANDARD DATA LOCATION
101	700A	101-D1/D2	2		STANDARD DATA LOCATION
101	700A	101-E1/E2	2		STANDARD DATA LOCATION
101	700A	101-F1/F2	2		STANDARD DATA LOCATION
101	700A	101-G1/G2	2		STANDARD DATA LOCATION
101	700A	101-H1/H2	2		STANDARD DATA LOCATION
101	700A	101-I1/I2	2		STANDARD DATA LOCATION
101	700A	101-J1/J2	2		STANDARD DATA LOCATION
101	700A	101-K1/K2	2		STANDARD DATA LOCATION
101	700A	101-L1/L2	2		STANDARD DATA LOCATION
101	700A	101-M1/M2	2	0	AV WALL INPUT LOCATION
101	700A	101-N1	1		AV CONTROL LOCATION
101	700A	101-O1	1		SHORT THROW PROJECTOR LOCATION
102	700A	102-A1/A2/A3	2	1	FLOOR BOX LOCATION - TYPE 2
102	700A	102-B1	1		DIGITAL SIGNAGE LOCATION
102A	700A	102A-A1/A2	2		STANDARD DATA LOCATION
103	700A	103+AP-A1/A2	2		WIRELESS ACCESS POINT
103	700A	103-A1/A2	2	0	AV INPUT FLOOR BOX LOCATION - TYPE 2
103	700A	103-B1/B2	2	0	AV INPUT FLOOR BOX LOCATION - TYPE 2
103	700A	103-C1	1		AV CONTROL LOCATION
103	700A	103-D1	1		CEILING MOUNTED PROJECTOR
103	700A	103-E1	1		CEILING MOUNTED PROJECTOR
103	700A	103-F1	1		CEILING MOUNTED PROJECTOR
104	700A	104+AP-A1/A2	2		WIRELESS ACCESS POINT
104	700A	104-A1/A2	2		STANDARD DATA LOCATION
104	700A	104-B1/B2	2		STANDARD DATA LOCATION
104	700A	104-C1/C2	2	0	FLOOR BOX LOCATION - TYPE 1
106	700A	106-A1/A2	2	0	AV INPUT FLOOR BOX LOCATION - TYPE 1
106	700A	106-B1	1		ROUGH-IN LCD LOCATION
107	700A	107-A1/A2	2		STANDARD DATA LOCATION
107	700A	107-B1/B2	2		STANDARD DATA LOCATION
108	700A	108-A1/A2	2	0	AV WALL INPUT LOCATION
108	700A	108-B1/B2	2		STANDARD DATA LOCATION
108	700A	108-C1	1		ROUGH-IN LCD LOCATION
108	700A	108-D1/D2	2		CEILING DATA OUTLET
108	700A	108-E1/E2	2		CEILING DATA OUTLET
108	700A	108-F1/F2	2		CEILING DATA OUTLET
109	700A	109+AP-A1/A2	2		WIRELESS ACCESS POINT
109	700A	109-A1/A2	2		STANDARD DATA LOCATION
109	700A	109-B1/B2	2		STANDARD DATA LOCATION
109	700A	109-C1/C2	2	0	AV WALL INPUT LOCATION
109	700A	109-D1	1		SHORT THROW PROJECTOR LOCATION
109	700A	109-E1/E2	2		CEILING DATA OUTLET
109	700A	109-F1/F2	2		CEILING DATA OUTLET
110	700A	110+AP-A1/A2	2		WIRELESS ACCESS POINT
110	700A	110-A1/A2	2		STANDARD DATA LOCATION
110	700A	110-B1/B2	2	0	AV WALL INPUT LOCATION
110	700A	110-C1/C2	2		STANDARD DATA LOCATION
110	700A	110-D1/D2	2		STANDARD DATA LOCATION
110	700A	110-E1	1		ROUGH-IN LCD LOCATION
110	700A	110-F1/F2	2		CEILING DATA OUTLET
110	700A	110-G1/G2	2		CEILING DATA OUTLET
110	700A	110-H1/H2	2		CEILING DATA OUTLET
111	700A	111+AP-A1/A2	2		WIRELESS ACCESS POINT
111	700A	111-A1/A2	2		STANDARD DATA LOCATION
111	700A	111-B1/B2	2		STANDARD DATA LOCATION
111	700A	111-C1/C2	2	0	AV INPUT FLOOR BOX LOCATION - TYPE 1
111	700A	111-D1/D2	2		CEILING DATA OUTLET
111	700A	111-E1/E2	2		CEILING DATA OUTLET
111	700A	111-F1/F2	2		CEILING DATA OUTLET
111	700A	111-G1/G2	2		CEILING DATA OUTLET
111	700A	111-H1/H2	2		CEILING DATA OUTLET
111	700A	111-I1/I2	2		WIRELESS ACCESS POINT
111	700A	111-J1/J2	2		CEILING DATA OUTLET
111	700A	111-K1	1		CEILING MOUNTED PROJECTOR
111	700A	111-L1/L2	2		WIRELESS ACCESS POINT
111	700A	111-M1/M2	2		CEILING DATA OUTLET
112	700A	112-A1/A2	2		STANDARD DATA LOCATION
112	700A	112-B1/B2	2		STANDARD DATA LOCATION
112	700A	112-C1/C2	2	0	AV WALL INPUT LOCATION
112	700A	112-D1	1		ROUGH-IN LCD LOCATION
112	700A	112-E1/E2	2		CEILING DATA OUTLET
112	700A	112-F1/F2	2		CEILING DATA OUTLET
112	700A	112-G1/G2	2		CEILING DATA OUTLET
114	700A	114+AP-A1/A2	2		WIRELESS ACCESS POINT
114	700A	114-A1/A2	2		STANDARD DATA LOCATION
114	700A	114-B1/B2	2		STANDARD DATA LOCATION
710	700A	710-A1/A2	2		STANDARD DATA LOCATION
710	700A	710-B1	1		DIGITAL SIGNAGE LOCATION
711	700A	711-A1/A2	2		STANDARD DATA LOCATION
711	700A	711-B1/B2	2		STANDARD DATA LOCATION
711	700A	711-C1/C2	2		STANDARD DATA LOCATION
Grand total			162	1	

SECOND FLOOR TELECOMMUNICATIONS SCHEDULE

ROOM NUMBER	ER/TR ROOM NUMBER	LABEL	DATA PORTS	ANALOG VOICE PORTS	NOTES
200	305A	200+AP-A1/A2	2		WIRELESS ACCESS POINT
201	305A	201-A1/A2	2		STANDARD DATA LOCATION
202	305A	202-A1/A2	2		STANDARD DATA LOCATION
202	305A	202-B1/B2	2		STANDARD DATA LOCATION
202	305A	202-C1/C2	2		STANDARD DATA LOCATION
202	305A	202-D1/D2	2		STANDARD DATA LOCATION
202	305A	202-E1/E2	2		STANDARD DATA LOCATION
202	305A	202-F1/F2	2		STANDARD DATA LOCATION
202	305A	202-G1/G2	2		STANDARD DATA LOCATION
203	305A	203-A1/A2	2		STANDARD DATA LOCATION
204	305A	204-A1/A2	2		STANDARD DATA LOCATION
205	305A	205-A1/A2	2		STANDARD DATA LOCATION
206	305A	206-A1/A2	2		STANDARD DATA LOCATION
207	305A	207-A1/A2	2		STANDARD DATA LOCATION
208	305A	208+AP-A1/A2	2		WIRELESS ACCESS POINT
208	305A	208-A1/A2	2		STANDARD DATA LOCATION
208	305A	208-B1/B2	0	2	VOICE ONLY LOCATION
208	305A	208-C1/C2	2		STANDARD DATA LOCATION
208	305A	208-D1/D2	2		STANDARD DATA LOCATION
209	305A	209+AP-A1/A2	2		WIRELESS ACCESS POINT
209	305A	209-A1/A2	2		STANDARD DATA LOCATION
210	305A	210-A1/A2	2		STANDARD DATA LOCATION
211	305A	211-A1/A2	2		STANDARD DATA LOCATION
212	305A	212-A1/A2	2		STANDARD DATA LOCATION
213	305A	213-A1/A2	2		STANDARD DATA LOCATION
214	305A	214+AP-A1/A2	2		WIRELESS ACCESS POINT
214	305A	214-A1/A2	2		STANDARD DATA LOCATION
215	305A	215-A1/A2	2		STANDARD DATA LOCATION
216	305A	216-A1/A2	2		STANDARD DATA LOCATION
217	305A	217+AP-A1/A2	2		WIRELESS ACCESS POINT
217	305A	217-B1/B2	2		STANDARD DATA LOCATION
217	305A	217-C1/C2	2		STANDARD DATA LOCATION
218	305A	218-A1/A2	2		STANDARD DATA LOCATION
219	305A	219-A1/A2	2		STANDARD DATA LOCATION
219	305A	219-B1/B2	2		STANDARD DATA LOCATION
219	305A	219-C1/C2	2		STANDARD DATA LOCATION
219	305A	219-D1/D2	2		STANDARD DATA LOCATION
219	305A	219-E1/E2	2		STANDARD DATA LOCATION
219	305A	219-F1/F2	2		STANDARD DATA LOCATION
219	305A	219-G1/G2	2		STANDARD DATA LOCATION
219	305A	219-H1/H2	2		STANDARD DATA LOCATION
219	305A	219-I1/I2	2		STANDARD DATA LOCATION
219	305A	219-J1/J2	2		STANDARD DATA LOCATION
219	305A	219-K1/K2	2		STANDARD DATA LOCATION
219	305A	219-L1/L2	2		STANDARD DATA LOCATION
219	305A	219-M1/M2	2		STANDARD DATA LOCATION
219	305A	219-N1/N2	2		STANDARD DATA LOCATION
219	305A	219-O1/O2	2	0	AV INPUT FLOOR BOX LOCATION - TYPE 1
219	305A	219-P1	1		AV CONTROL LOCATION
219	305A	219-Q1	1		SHORT THROW PROJECTOR LOCATION
221	305A	221-A1/A2	2		STANDARD DATA LOCATION
221	305A	221-B1/B2	2		STANDARD DATA LOCATION
221	305A	221-C1/C2	2	0	AV WALL INPUT LOCATION
221	305A	221-D1	1		AV CONTROL LOCATION
221	305A	221-E1	1		SHORT THROW PROJECTOR LOCATION
221	305A	221-F1/F2	2		CEILING DATA OUTLET
221	305A	221-G1/G2	2		CEILING DATA OUTLET
222	305A	22-M1/M2	2		CEILING DATA OUTLET
222	305A	222+AP-A1/A2	2		WIRELESS ACCESS POINT
222	305A	222-A1/A2	2	0	AV WALL INPUT LOCATION
222	305A	222-B1/B2	2	0	AV WALL INPUT LOCATION
222	305A	222-C1/C2	2	0	AV INPUT FLOOR BOX LOCATION - TYPE 1
222	305A	222-D1	1		AV CONTROL LOCATION
222	700A	222-E1	1		AV CONTROL LOCATION
222	305A	222-F1	1		AV CONTROL LOCATION
222	305A	222-G1	1		ROUGH-IN LCD LOCATION
222	305A	222-H1	1		ROUGH-IN LCD LOCATION
222	305A	222-I1	1		ROUGH-IN LCD LOCATION
222	305A	222-J1/J2	2		CEILING DATA OUTLET
222	305A	222-K1/K2	2		CEILING DATA OUTLET
222	305A	222-L1/L2	2		CEILING DATA OUTLET
222	305A	222-N1/N2	2		CEILING DATA OUTLET
222	305A	222-O1/O2	2		CEILING DATA OUTLET
224	305A	224+AP-A1/A2	2		WIRELESS ACCESS POINT
224	305A	224-A1/A2	2	0	AV INPUT FLOOR BOX LOCATION - TYPE 2
224	305A	224-B1	1		AV CONTROL LOCATION
224	305A	224-C1	1		CEILING MOUNTED PROJECTOR
225	305A	225-A1/A2	2	0	AV WALL INPUT LOCATION
225	305A	225-B1	1		AV CONTROL LOCATION
225	305A	225-C1	1		SHORT THROW PROJECTOR LOCATION
227	305A	217-A1/A2	2		STANDARD DATA LOCATION
227	305A	227+AP-A1/A2	2		WIRELESS ACCESS POINT
227	305A	227-A1/A2	2		STANDARD DATA LOCATION
227	305A	227-B1/B2	2		STANDARD DATA LOCATION
227	305A	227-C1/C2	2		STANDARD DATA LOCATION
227	305A	227-D1/D2	2		STANDARD DATA LOCATION
227	305A	227-E1/E2	2		STANDARD DATA LOCATION
227	305A	227-F1/F2	2		STANDARD DATA LOCATION
227	305A	227-G1/G2	2	0	AV INPUT FLOOR BOX LOCATION - TYPE 2
227	305A	227-H1	1		AV CONTROL LOCATION
227	305A	227-I1	1		SHORT THROW PROJECTOR LOCATION
227	305A	227-J1/J2	2		CEILING DATA OUTLET
227	305A	227-K1/K2	2		CEILING DATA OUTLET
227	305A	227-L1/L2	2		CEILING DATA OUTLET
227	305A	227-M1/M2	2		CEILING DATA OUTLET
227	305A	227-N1/N2	2		CEILING DATA OUTLET
227	305A	227-O1/O2	2		CEILING DATA OUTLET
229	305A	229+AP-A1/A2	1		WIRELESS ACCESS POINT
229	305A	229-A1/A2	2	0	AV INPUT FLOOR BOX LOCATION - TYPE 2
229	305A	229-B1	1		AV CONTROL LOCATION
229	305A	229-C1	1		CEILING MOUNTED PROJECTOR
720	305A	720-A1	1		DIGITAL SIGNAGE LOCATION
Grand total			182	2	

THIRD FLOOR TELECOMMUNICATIONS SCHEDULE

ROOM NUMBER	ER/TR ROOM NUMBER	LABEL	DATA PORTS	ANALOG VOICE PORTS	NOTES
300	305A	300+AP-A1/A2	2		WIRELESS ACCESS POINT
300	305A	300-A1/A2	2	0	AV INPUT FLOOR BOX LOCATION - TYPE 2
300	305A	300-B1/B2	2	0	AV INPUT FLOOR BOX LOCATION - TYPE 2
300	305A	300-C1	1		AV CONTROL LOCATION
300	305A	300-D1	1		CEILING MOUNTED PROJECTOR
300	305A	300-E1	1		CEILING MOUNTED PROJECTOR
301	305A	301+AP-A1/A2	2		WIRELESS ACCESS POINT
302	305A	302-A1/A2	2	0	AV WALL INPUT LOCATION
302	305A	302-B1	1		AV CONTROL LOCATION
302	305A	302-B1/B2	2		STANDARD DATA LOCATION
302	305A	302-C1	1		ROUGH-IN LCD LOCATION
303	305A	303+AP-A1	1		WIRELESS ACCESS POINT
303	305A	303-A1/A2	2	0	AV INPUT FLOOR BOX LOCATION - TYPE 1
303	305A	303-B1/B2	2	0	AV INPUT FLOOR BOX LOCATION - TYPE 1
303	305A	303-C1/C2	2	0	AV INPUT FLOOR BOX LOCATION - TYPE 1
303	305A	303-D1/D2	2	0	AV INPUT FLOOR BOX LOCATION - TYPE 1
303	305A	303-E1/E2	2	0	AV INPUT FLOOR BOX LOCATION - TYPE 1
303	305A	303-F1	1		AV CONTROL LOCATION
303	305A	303-G1	1		SHORT THROW PROJECTOR LOCATION
303	305A	303-H1	1		SHORT THROW PROJECTOR LOCATION
303	305A	303-I1	1		SHORT THROW PROJECTOR LOCATION
303	305A	303-J1	1		SHORT THROW PROJECTOR LOCATION
303	305A	303-K1	1		SHORT THROW PROJECTOR LOCATION
304	305A	304-A1/A2	2	0	AV WALL INPUT LOCATION
304	305A	304-B1/B2	2		STANDARD DATA LOCATION
304	305A	304-C1	1		AV CONTROL LOCATION
304	305A	304-D1	1		ROUGH-IN LCD LOCATION
306	305A	306+AP-A1/A2	2		WIRELESS ACCESS POINT
308	305A	308-A1/A2	1	1	AV WALL INPUT LOCATION
308	305A	308-B1	1		AV CONTROL LOCATION
308	305A	308-C1	1		ROUGH-IN LCD LOCATION
310	305A	310-A1/A2	2		STANDARD DATA LOCATION
312	305A	312-A1/A2	2		STANDARD DATA LOCATION
314	305A	314+AP-A1/A2	2		WIRELESS ACCESS POINT
314	305A	314-A1/A2	2	0	AV INPUT FLOOR BOX LOCATION - TYPE 2
314	305A	314-B1	1		AV CONTROL LOCATION
314	305A	314-C1	1		CEILING MOUNTED PROJECTOR
315	305A	315+AP-A1/A2	2		WIRELESS ACCESS POINT
315	305A	315-A1/A2	2	0	AV INPUT FLOOR BOX LOCATION - TYPE 2
315	305A	315-B1	1		CEILING MOUNTED PROJECTOR
315	305A	315-C1	1		CEILING MOUNTED PROJECTOR
316	305A	316-A1/A2	2	0	AV WALL INPUT LOCATION
316	305A	316-B1	1		AV CONTROL LOCATION
316	305A	316-C1	1		SHORT THROW PROJECTOR LOCATION
316	305A	317-C1	1		AV CONTROL LOCATION
317	305A	317+AP-A1/A2	2		WIRELESS ACCESS POINT
317	305A	317-A1/A2	2	0	AV INPUT FLOOR BOX LOCATION - TYPE 2
317	305A	317-B1	1		CEILING MOUNTED PROJECTOR
318	305A	318+AP-A1/A2	2		WIRELESS ACCESS POINT
318	305A	318-A1/A2	2	0	AV INPUT FLOOR BOX LOCATION - TYPE 2
318	305A	318-B1	1		AV CONTROL LOCATION
318	305A	318-C1	1		CEILING MOUNTED PROJECTOR
318	305A	318-D1	1		CEILING MOUNTED PROJECTOR
731	305A	731-A1	1		DIGITAL SIGNAGE LOCATION
Grand total			79	1	

boora

Boora Architects, Inc.
720 SW Washington, Suite 800
Portland, OR 97205
T. 503.226.1575 F. 503.241.7429
www.boora.com

DESIGN 27 TECHNOLOGY + ACOUSTICS
740 E. 52ND STREET, STE. 6
INDIANAPOLIS, IN 46205
317.536.8000
WWW.DESIGN27.COM

REGISTERED COMMUNICATIONS DISTRIBUTION DESIGNER
Bicsi
MATTHEW J. CONNOLLY
REG. NO. 153914R
EXPIRES 12-31-15
RCDD
SIGNATURE

Earlham College Science Complex
Phases 2
801 National Road West
Richmond, IN 47374-4095

MARK	DATE	DESCRIPTION

Issued: February 28th, 2014
Scale: N.T.S.

Copyright

Boora Project Number: 12009

CONFORMED SET

TELECOMMUNICATIONS SCHEDULES

T601

2/26/2014 1:50:31 PM